Digital Video Mixer
Service Manual

VIDEONICS
The Video Editing Company

MX-1 FATHER BOARD DEBUGGING FLOW CHART

01/27/95

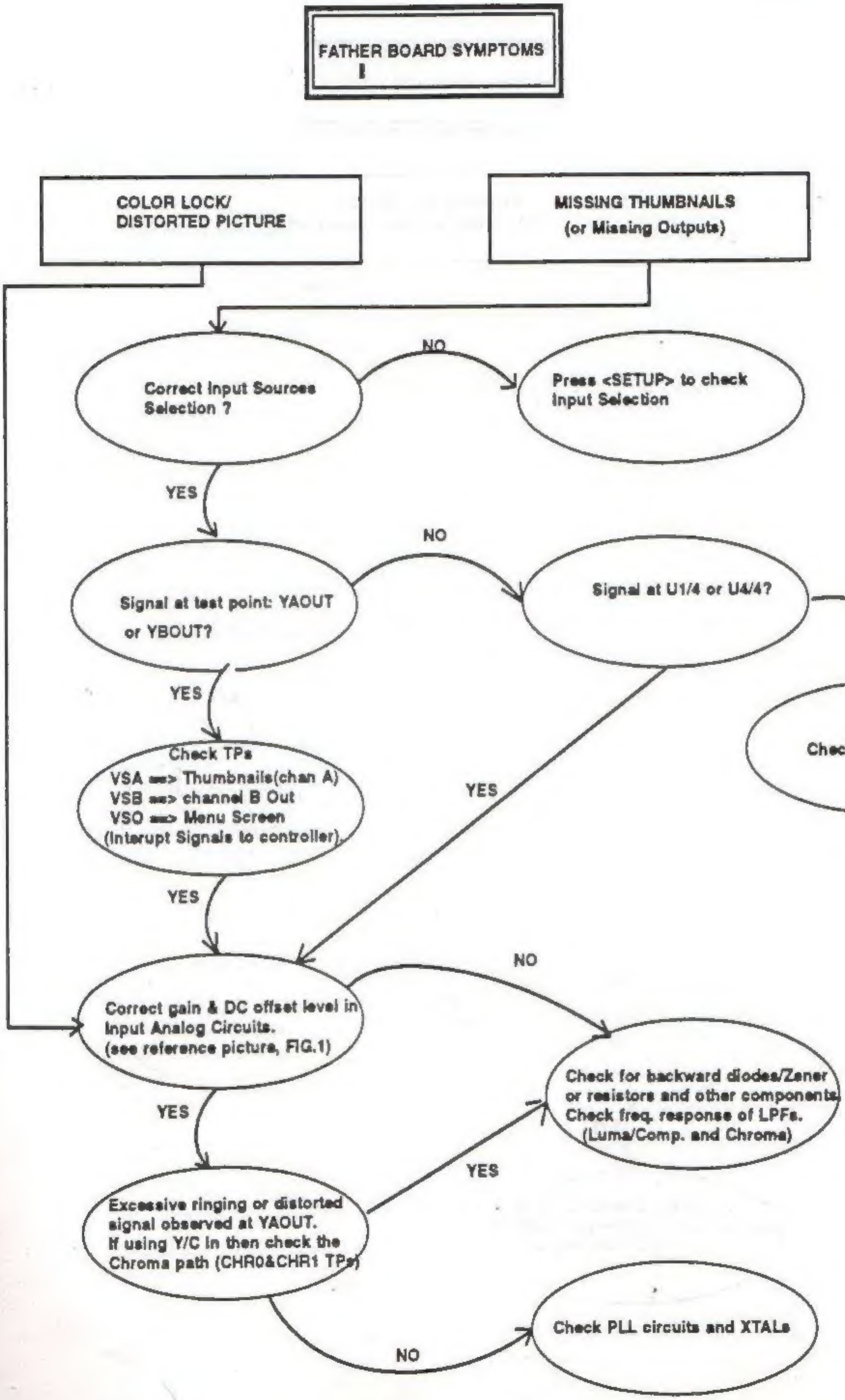

MX-1 FATHER BOARD DEBUGGING FLOW CHART

01/23/95

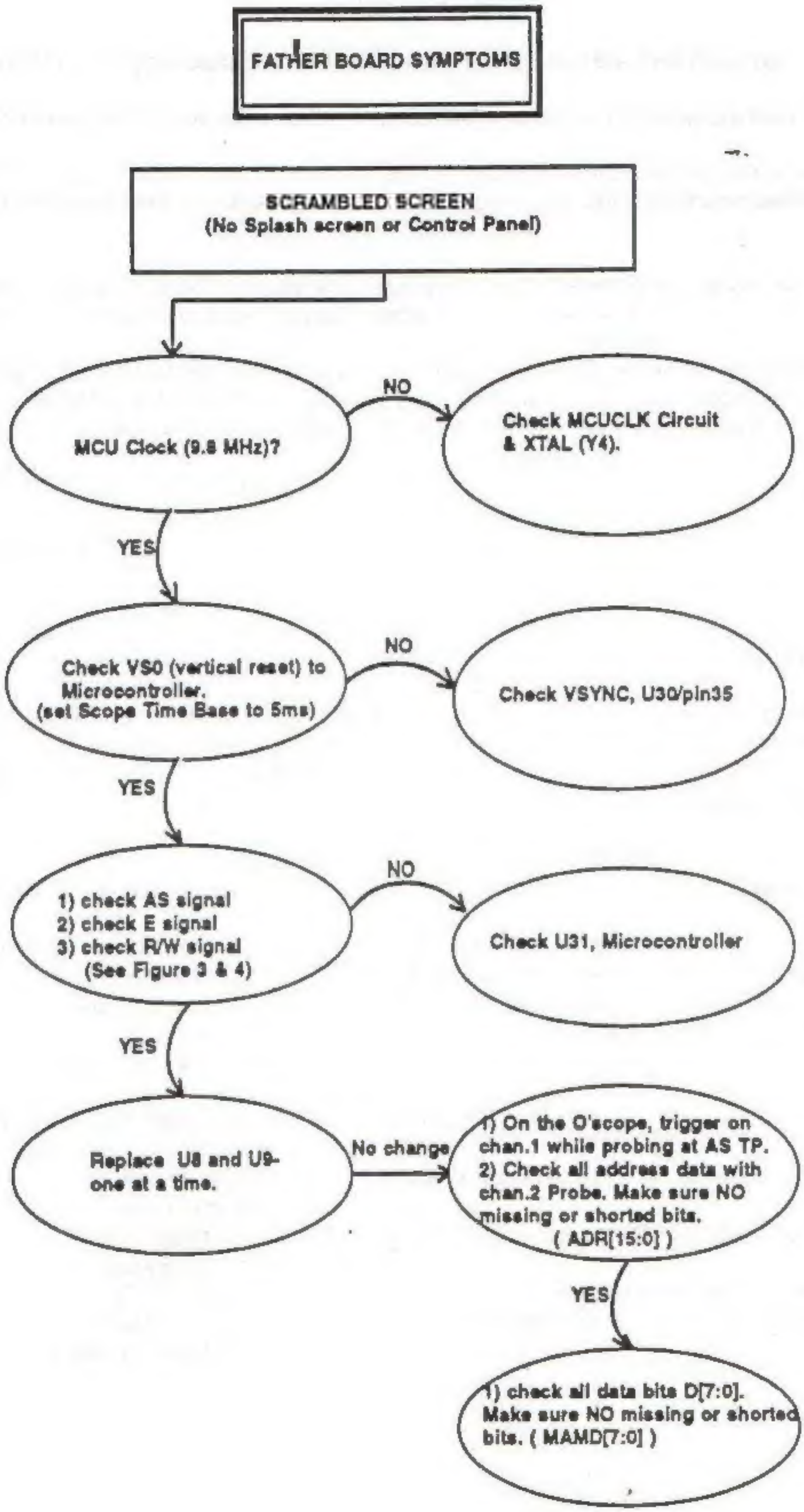

FATHER BOARD TROUBLE SHOOTING GUIDE
THROUGH JAN. 2[illegible], 1995

OBLEM	COMPONENT	LIKELY CAUSE
DIO	Q1	DEFECTIVE OR SOLDER SHORT
	L2	MISSING
	Q59	DEFECTIVE
	R107	MISSING OR POORLY SOLDERED
	R111	MISSING
	R113	DEFECTIVE
N'T ADJUST	Y1	DEFECTIVE
ANNEL COLOR	Q31	DEFECTIVE OR POORLY SOLDERED
	JACK	POORLY SOLDERED
	Q29	POORLY SOLDERED
	C190	POORLY SOLDERED
	C201	MISSING
	U27	DEFECTIVE OR POORLY SOLDERED
IANNEL COLOR LOCK	Y3	DEFECTIVE
	R253	POORLY SOLDERED
	Y2	DEFECTIVE
	C145	WRONG VALUE
	D31	DEFECTIVE OR MISSING
	C141	REVERSED OR WRONG VALUE
	R254	POORLY SOLDERED
HANNEL HALF THERE	U30	DEFECTIVE
HANNEL MISSING	C221	TRACE DAMAGED OR WRONG VALUE
	D13	DEFECTIVE
	Y2	DEFECTIVE
	D23	DEFECTIVE
	R186	POORLY SOLDERED OR TRACE DAMAGED
	U18	DEFECTIVE OR POORLY SOLDERED
HANNEL NOISY	D31	DEFECTIVE OR REVERSED
	R229	POORLY SOLDERED
	U26	DEFECTIVE
	U27	POORLY SOLDERED
	Y2	DEFECTIVE
HANNEL OVERSIZED	U30	DEFECTIVE
HANNEL SCRAMBLED	JACK	POORLY SOLDERED
	U26	DEFECTIVE OR POORLY SOLDERED

4.2.0.4. Half-n-half fixed test begins. This displays digital, time base corrected, channel "B" in top half of the screen and channel "A" in bottom half of the screen. Input video source is Y/C-1.

4.2.1. Adjust Channel A Chroma A to D:

4.2.1.1. While watching the monitor display adjust the blue pot, RV4 until the vertical lines on the video disappear. This pot will adjust only the bottom half of the monitor display.

4.2.2 Adjust Channel B Chroma A to D:

4.2.2.1. Adjust the second blue pot RV3 and follow the same adjustment procedure as for the first blue pot. This time the top half of the monitor will be adjusted. Turn the pot until the vertical lines disappear.

4.2.2.2. Continue running this MFG Test [01] to be used for matching the Luminance.

4.3. Match Luminance of Channel A to B:

While watching the monitor display, adjust RV2 so that the horizontal split line disappears in the middle two Dark Gray Title and background.

4.4. Match Horizontal Position of Channel A to B (Left/Right Shift)

4.4.1. While watching the monitor display, adjust RV1 so that the vertical edge of the lines separating the letter "P","R" or "B" or Box line up above and below the horizontal split line.

4.4.2. Press the <OK> key to exit back to the Top Level MFG Test Menu.

4.4.3. Power off the board, and remove cable connections.

Tune-up procedure is complete

CHANNELS MISMATCHED	D12	DEFECTIVE OR POORLY SOLDERED
	D13	DEFECTIVE
	D16	DEFECTIVE
	R187	MISSING
	POTS	ADJUSTED
	D14	DEFECTIVE
	C101	WRONG VALUE
	C191	MISSING
	U26	DEFECTIVE
CHANNELS SCRAMBLED	JACK	POORLY SOLDERED
COLOR	R503	MISSING OR POORLY SOLDERED
COMPOSITE FLICKERS	Q30	POORLY SOLDERED
	POTS	ADJUSTED
	Q31	DEFECTIVE
COMPOSITE NO VIDEO	Q15	POORLY SOLDERED OR REVERSED
	L6	POORLY SOLDERED
FLICKERS	R503	MISSING
FREQUENCY	Y1	DEFECTIVE
LED	LED	DEFECTIVE, POORLY SOLDERED OR REVERSED
NO POWER/VCC SHORT	C146	POORLY SOLDERED
	SW1	POORLY SOLDERED OR TRACE DAMAGED
	C222	POORLY SOLDERED
	C284	POORLY SOLDERED
	L24	DEFECTIVE
	R80	POORLY SOLDERED
NO VIDEO	L22	DEFECTIVE
	U31	POORLY SOLDERED
	L4	DEFECTIVE
	Y1	DEFECTIVE
SOURCE MENU BLANK	U31	POORLY SOLDERED
SOURCE MENU FLICKERS	U31	POORLY SOLDERED

OURCE MENU SCRAMBLED	U31	POORLY SOLDERED
	U30	POORLY SOLDERED OR TRACE DAMAGED
	U27	POORLY SOLDERED
	U35	DEFECTIVE, POORLY SOLDERED OR TRACE DAMAGED
	Y4	DEFECTIVE
	U34	POORLY SOLDERED
AKE BAR	RV6	DEFECTIVE, LOOSE OR POORLY SOLDERED
	POTS	ADJUSTED
	C242	POORLY SOLDERED
HUMBNAILS CHECKERED	C201	DEFECTIVE OR POORLY SOLDERED
HUMBNAILS COLOR	JACK	DEFECTIVE OR POORLY SOLDERED
	Q31	DEFECTIVE, MISSING OR POORLY SOLDERED
HUMBNAILS MISSING	Q30	DEFECTIVE, MISSING OR POORLY SOLDERED
	JACK	POORLY SOLDERED
	Y3	DEFECTIVE
	D17	DEFECTIVE, MISSING OR REVERSED
	D16	DEFECTIVE
	Q31	DEFECTIVE OR MISSING
	U27	DEFECTIVE
	C201	MISSING OR POORLY SOLDERED
HUMBNAILS ROLL	U27	DEFECTIVE
HUMBNAILS SCRAMBLED	JACK	POORLY SOLDERED
/C COLOR	JACK	DEFECTIVE OR POORLY SOLDERED
/C FLICKERS	Q30	DEFECTIVE OR POORLY SOLDERED
	POTS	ADJUSTED
	Q31	DEFECTIVE
/C NO VIDEO	JACK	POORLY SOLDERED
	Q18	MISSING
/C SCRAMBLED	JACK	POORLY SOLDERED

2.2. Connect the Y/C cable to the Video In 1 connector, top most connector (J7) and all the RCA composite cables to all other composite inputs.

2.3. Connect the composite RCA cable from Monitor Input B to the Preview Video output, bottom most yellow connector J1.

2.4. Attach the keyboard cable to the socket connector on the main pcb at JP3. The red and brown wires must be oriented to the right.

3. Initialization:

3.1. Power on the Mixer under test. The power, audio, video, and "A" LEDs should come on, the "B" LED should blink off and on. The Videonics Mixer "Splash Screen" will be displayed momentarily then the Mixer "Control Panel" will be displayed on the Preview output, (Monitor video input "B") which is the only output connected for Tune-Up.

3.2. Check the "thumbnail" (small video image) in all four windows across the top of the display. Insure that they are the correct color and brightness, and none are flashing or missing.

4. MX1 Father Board Tune Up:

4.1. Adjust 13.5Mhz clock:

4.1.1. From the frequency counter, clip the probe tip on pin 8, U28 and the black ground alligator clip to GND test point (TP26).

4.1.2. Adjust the variable capacitor CV1 until the frequency is 13,500,000 (13.5Mhz) +/- 100hz. **Caution: if the frequency counter doesn't change as you rotate the alignment tool, it's probably because the blade on the alignment tool is too short, and you aren't actually moving the variable caps moving plate.**

4.1.3. Power cycle the Mixer under test, insure that the frequency adjustment hasn't changed.

4.1.4. Insure that the video thumbnails are still correct color, no flashing or black and white.

4.1.5. Disconnect the frequency counter test probe from the main pcb.

4.2. Adjust Chroma channels:

4.2.0.1. Enter the manufacturing test menu by pressing and holding the following keys simultaneously: <SHIFT>,<FLIP>, and <AUDIO/VIDEO>. The Top Level MFG Test Menu will appear.

4.2.0.2. The top level MFG Test Menu has three options, **[01]**, **[02]**, and **[03]**.

4.2.0.3. From the Top Level MFG Test Menu select option **[01]**, by using the four way cursor positioning key (Diamond Key). When the cursor is on the **[01]** option press the <OK> key.

Mixer Father Board Tune Up Procedure
PROC-0055-01 Revision A; 02/27/95

1. **Equipment:**
   1. Composite Video sources:
      a. SOURCE 1 (Y/C & Composite):
      For PAL: TM2000 with set up as following:
      - Background: Lightest Gray Background with the control color bars set up as indicated- Hue (top bar) at 000, Saturation (middle bar) at 000, and lightness (bottom bar) at 150."
      - Font: Block (the fourth down from Menu).
      - Size: Biggest (the right most size selection).
      - Title: Darker Gray letters P, R, B (Hue:000, Saturation:000, Lightness:100) with Black outline and box.

      For NTSC: TM2000 with set up as following:
      - Background: Blue background (default color palette selection)* with the control color bars set up as indicated- Hue at 80, Saturation at 120, and lightness at 30.
      - Font: Block (the fourth down from Menu).
      - Size: Biggest (the right most size selection).
      - Title: Darker Grey letters P, R, B (Hue: 000, Saturation: 000, Lightness: 100) with lighter Grey outline and box (Hue: 000, Saturation: 000, and Lightness: 150).

      b. SOURCE 2 (Composite): TM2000 with "horizontal" color bar output (selected from MFG Test Menu).
      c. SOURCE 3 (Composite): TM 2000 with Solid RED Background output (the third Red down from background color palette (Hue:195; Saturation:145, Lightness:050)).
      d. SOURCE 4 (Composite): TM 2000 with Solid GREEN Background output (the first Green from background color palette (Hue:102, Saturation:151, Lightness:61)).
   2. Frequency counter (8 digits) with Test Probe (X1).
   3. Video monitor with composite input. Recommended SONY PVM 1344Q.

   Note that all input sources should have nominal Subcarrier frequency (14.31818MHZ for NTSC & 17.734475MHz for PAL, +/- 100 Hz).
   * Press <SHIFT>, <COMMAND> and <UNDO> keys simultaneously to get into MFG Test Menu. Select "Reset Database" then press <OK> to clear all previous memories. Use the Up/Down cursor to select Exit Menu then proceed the set up procedure for T2000. Refer to TM2000 Instruction Manual (chapter 14) for more details.

2. **Cable Hookup:**
   2.1. Install the board onto the test fixture.

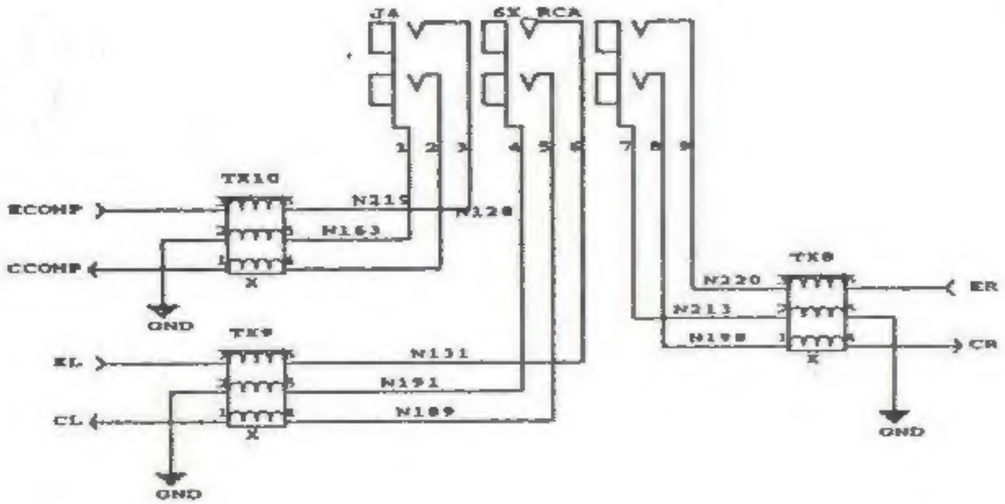

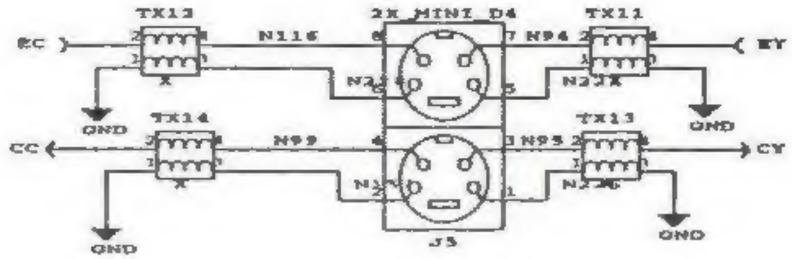

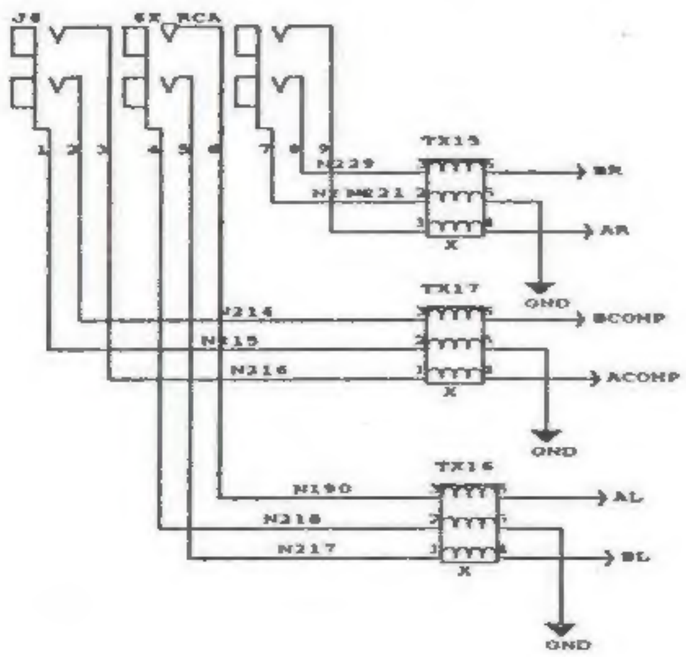

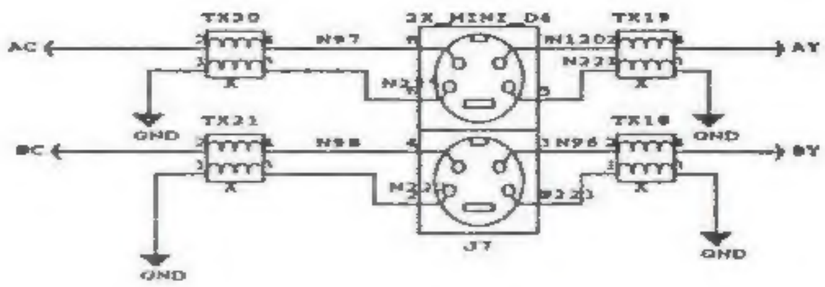

NOTE:
ALL DESIGNATORS WITH TX ARE BYPASSED

Title:NIK_CON	Sheet 1	Date:2-24-1995_9:17
Note:3-27	#CNN-0055-03	Rev C
Videonics Inc.	DRAWN BY: WEI-TE CHANG	

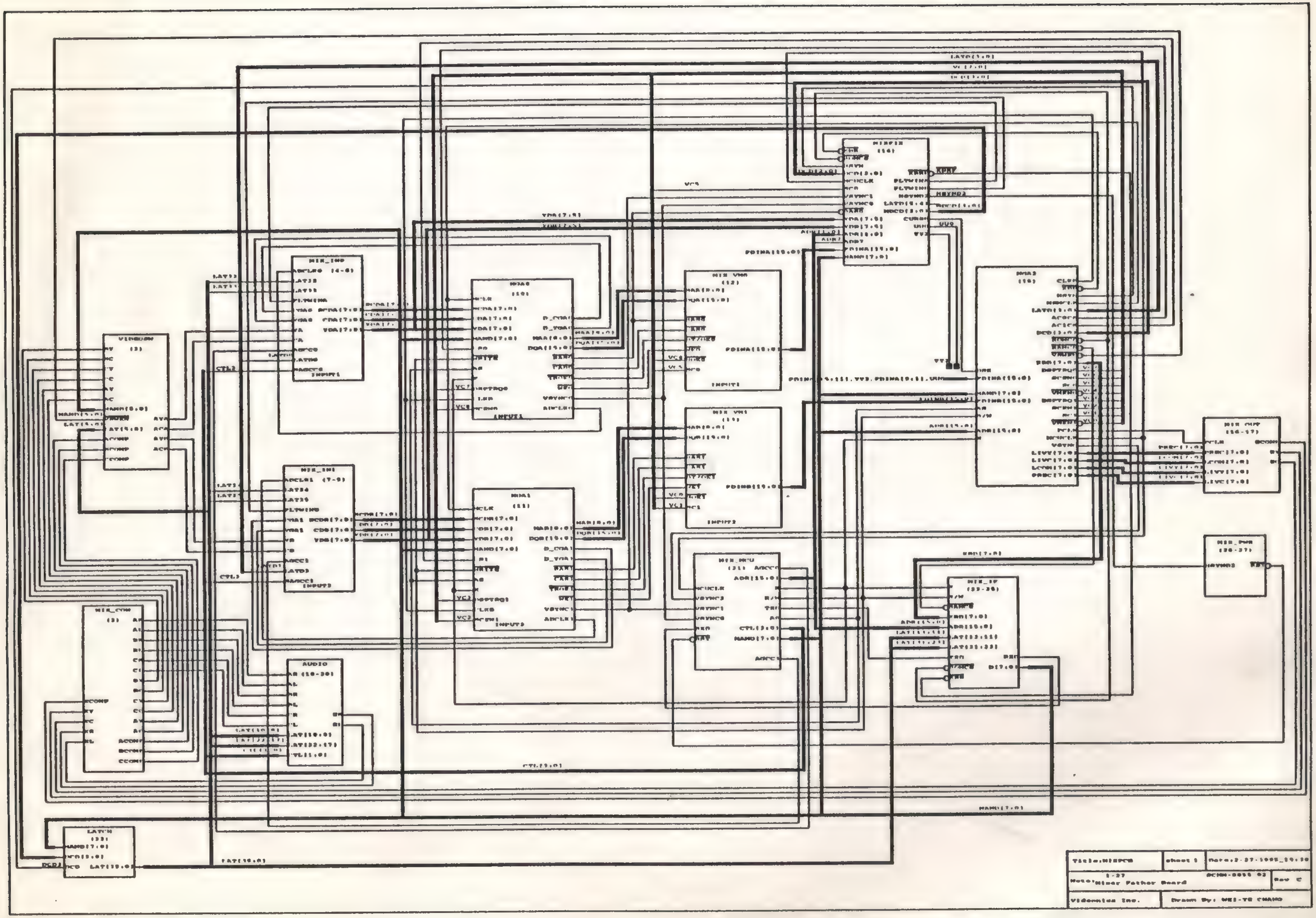

MIX_IN0
MIX_IN1
MIX_COM
MIX_VM0
MIX_VM1
MIX_MCU
MIX_IF
MIX_OUT
MIX_PWR
AUDIO
LATCH
INPUT1
INPUT2
INPUT3
Title:MIXPCB
sheet 1
Date:2-27-1995_19:30
Note: 1-27
Mixer Father Board
Rev C
Videonics Inc.
Drawn By: WEI-TE CHANG

	NTSC	PAL
R234	10K	OPEN
R501	OPEN	001M

Title:MIX_IN0	Sheet 1	Date:2-27-1995_14:34
Note: 4-27	SCHM-0055-02	Rev C
Videonics Inc.	DRAWN BY: WEI-TE CHANG	

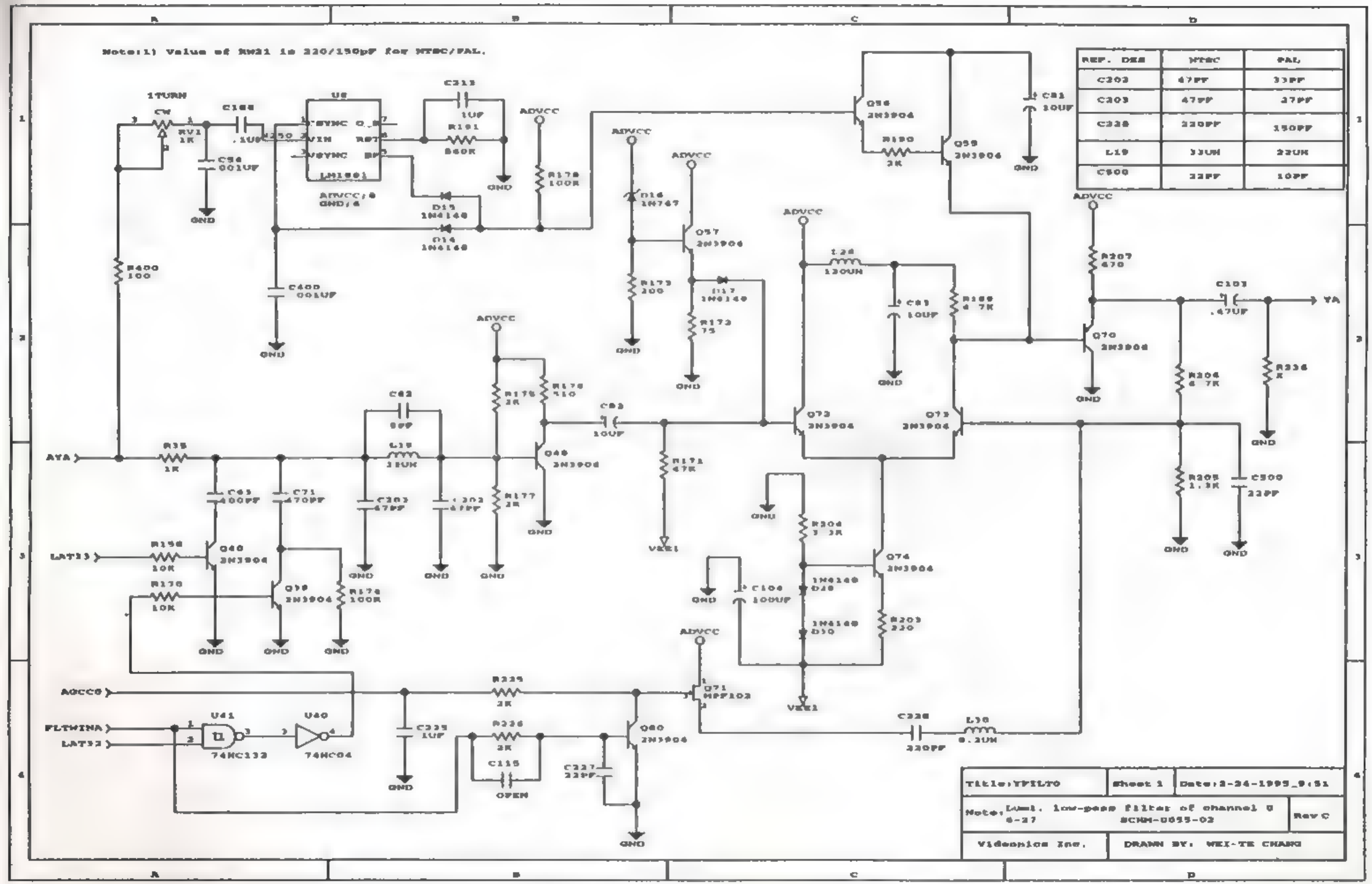
Note:1) Value of RW21 is 220/150pF for NTSC/PAL.
REF. DES | NTSC | PAL
C202 | 47PF | 33PF
C203 | 47PF | 27PF
C228 | 220PF | 150PF
L19 | 33UH | 22UH
C500 | 22PF | 10PF
1TURN
CW
RV1 1K
C166 .1UF
C54 .001UF
U6
LM1881
ADVCC/8
GND/4
C213 1UF
R191 560K
D15 1N4148
D14 1N4148
R178 100K
R400 100
C400 .001UF
ADVCC
GND
D16 1N747
Q57 2N3904
R173 200
D17 1N4148
R172 75
Q56 2N3904
R190 2K
Q59 2N3904
C81 10UF
L28 120UH
C83 10UF
R189 4.7K
Q70 2N3904
R207 470
C103 .47UF
YA
R204 4.7K
R236 K
R205 1.3K
C500 22PF
Q72 2N3904
Q73 2N3904
R171 47K
VEE1
R204 3.3K
Q74 2N3904
1N4148 D28
1N4148 D30
R203 220
C104 100UF
C82 5PF
L19 33UH
C203 47PF
C202 47PF
R175 2K
R176 510
Q48 2N3904
R177 2K
C83 10UF
AYA
R35 1K
C63 400PF
C71 470PF
LAT33
R158 10K
Q40 2N3904
R170 10K
Q39 2N3904
R174 100K
AGCC0
FLTWINA
LAT32
U41 74HC132
U40 74HC04
R225 2K
C225 1UF
R226 2K
C115 OPEN
C227 22PF
Q60 2N3904
Q71 MPF102
C228 220PF
L30 8.2UH
Title:YFILTO
Sheet 1
Date:2-24-1995_9:51
Note: Lumi. low-pass filter of channel U
6-27
SCHM-0055-02
Rev C
Videonics Inc.
DRAWN BY: WEI-TE CHANG

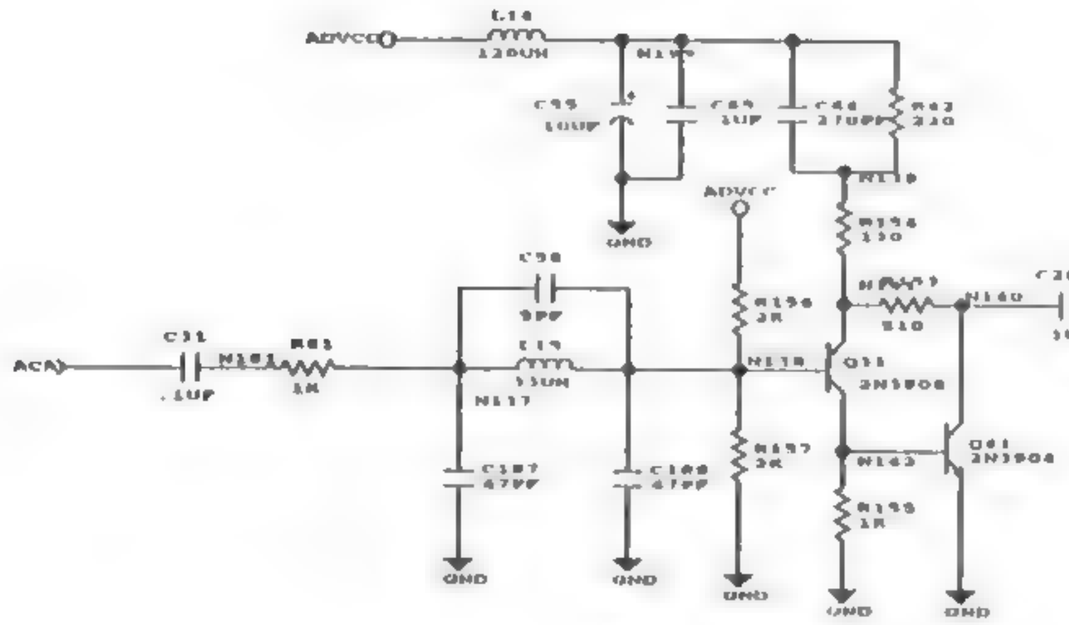

NOTE: COMPONENT DIFFERENCES BETWEEN NTSC AND PAL

REF DES	NTSC	PAL
C66	270PF	OPEN
C187	47PF	33PF
C186	47PF	33PF
L15	33UH	82UH

Title:CFILTO	Sheet 1	Date:2-27-1995_16:58
Note: Chroma low-pass filter of channel 0 9-27 SCHM-0059-02		Rev C
Videonics Inc.	DRAWN BY: WEI-TE CHANG	

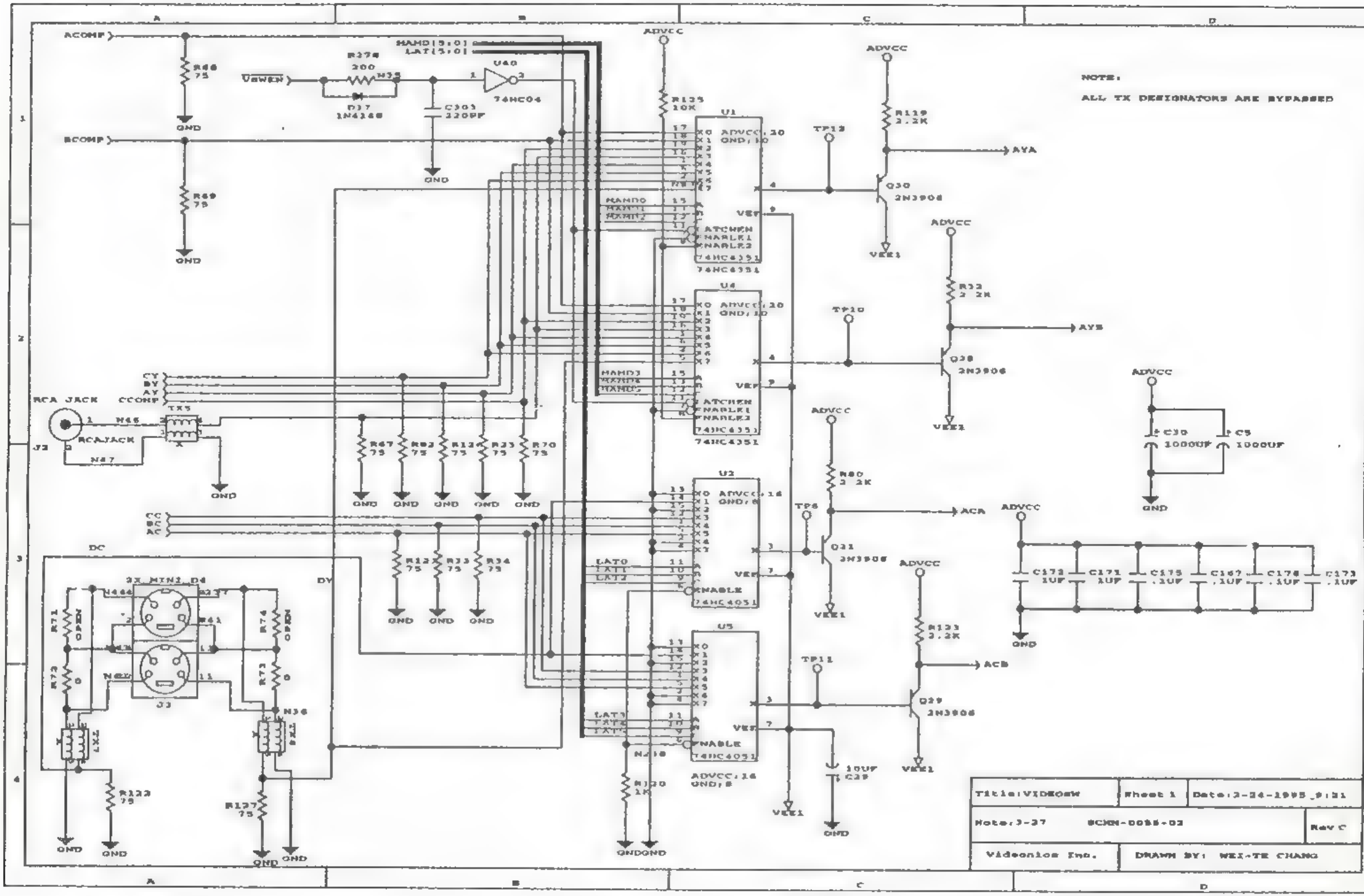
NOTE:
ALL TX DESIGNATORS ARE BYPASSED
ACOMP
BCOMP
VSWEN
MAMD[5:0]
LAT[5:0]
U40
74HC04
U1
U4
U2
U5
74HC4351
74HC4051
ADVCC
AYA
AYB
ACA
ACB
RCA JACK
RCAJACK
TX5
J2
J3
DC
DY
GND
VEE1
Title:VIDEOSW
Sheet 1
Date:2-24-1995 9:21
Note:3-27
SCHN-0055-02
Rev C
Videonics Inc.
DRAWN BY: WEI-TE CHANG

	NTSC	PAL
R238	10K	OPEN
R500	OPEN	500HM
R212	300K	150K

Title:MIX_IN1	Sheet 1	Date:2-27-1995_15:19
Note:7-27	SCHN-0055-02	Rev C
Videonics Inc	DRAWN BY: WEI-TE CHANG	

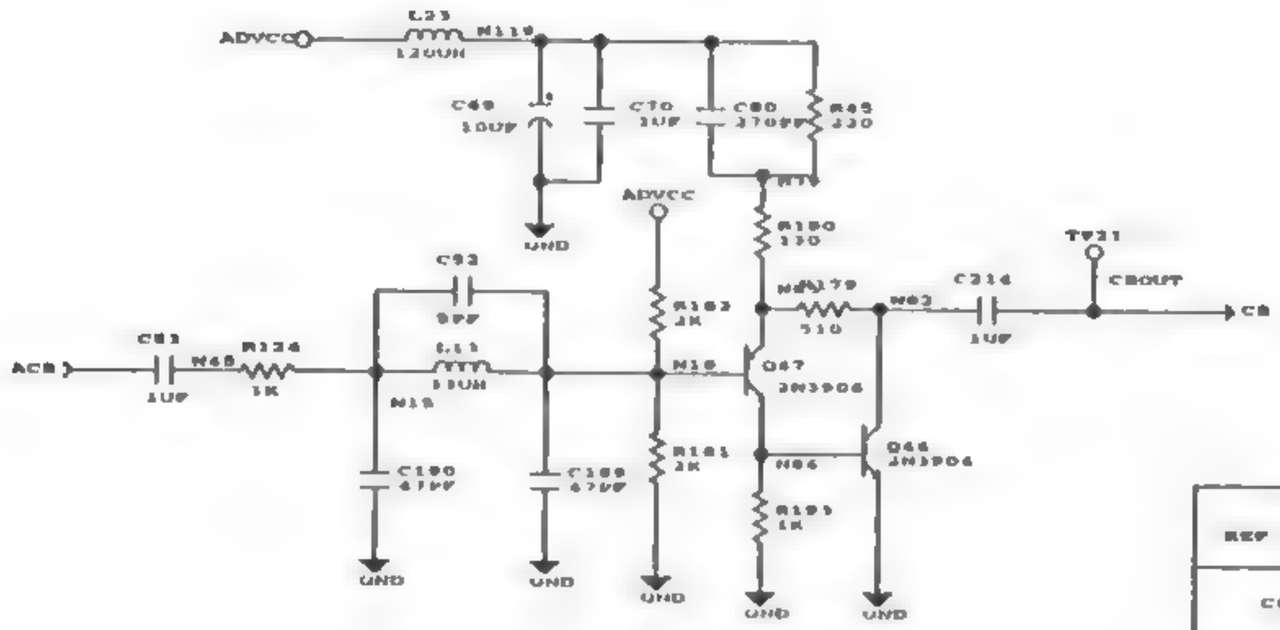

REF DES.	NTSC	PAL
C80	470PF	OPEN
C189	47PF	33PF
C190	47PF	33PF
L11	33UH	22UH

Title:CFILT1	Sheet 1	Date:2-27-1995_15:14
Note: Chroma low-pass filter of channel 1 8-27 SCHN-0058 02		Rev C
Videonics Inc.	DRAWN BY: WEI-TE CHANG	

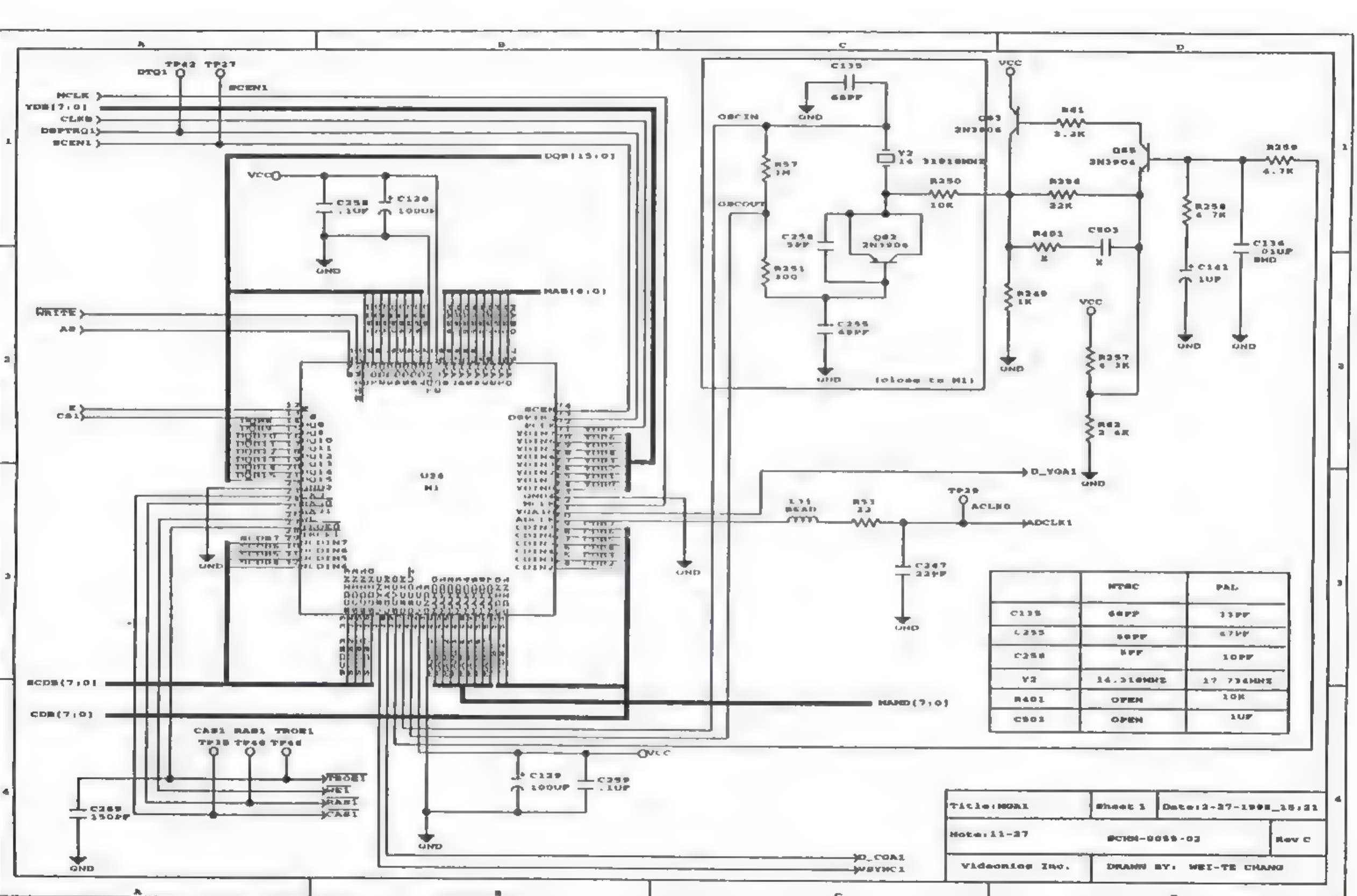

	NTSC	PAL
C135	68PF	33PF
C255	68PF	47PF
C258	5PF	10PF
Y2	14.318MHZ	17.734MHZ
R401	OPEN	10K
C503	OPEN	1UF

Title:MGA1	Sheet 1	Date:2-27-1998_15:21
Note:11-27	SCHM-0055-02	Rev C
Videonics Inc.	DRAWN BY: WEI-TE CHANG	

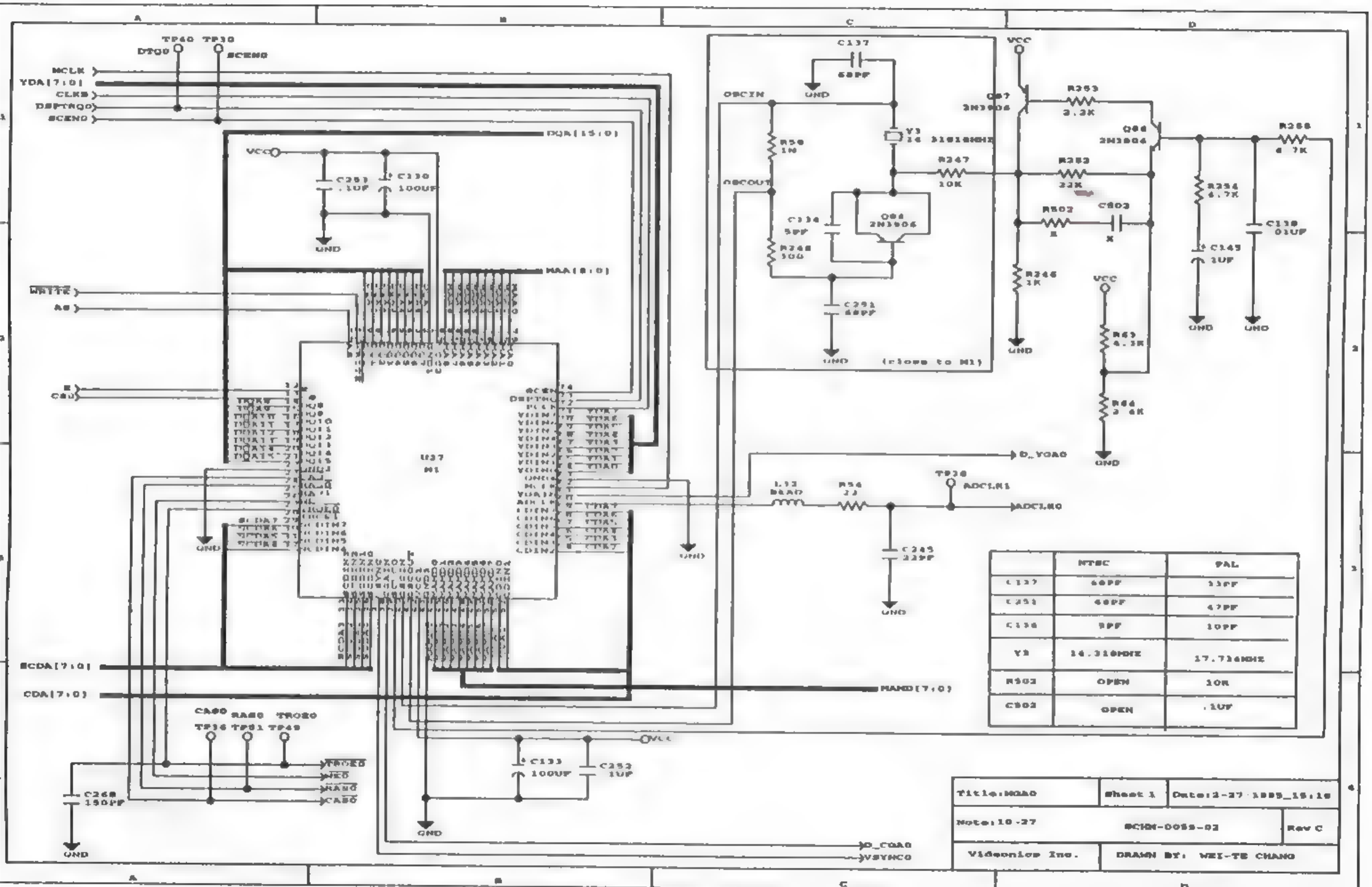

	NTSC	PAL
C137	68PF	33PF
C251	68PF	47PF
C134	5PF	10PF
Y3	14.318MHZ	17.734MHZ
R502	OPEN	10R
C502	OPEN	.1UF

Title:MDA0	Sheet 1	Date:2-27-1995_15:18
Note:10-27	SCHN-0055-02	Rev C
Videonics Inc.	DRAWN BY: WEI-TE CHANG	

Note(1) Value of RV21 is 330/150pF for NTSC/PAL.

REF. DES	NTSC	PAL
C193	47PF	33PF
C193	47PF	27PF
C231	220PF	150PF
L13	33UH	22UH
C501	33PF	10PF

Title:YFILT1	Sheet 1	Date:3-24-1998_10:01
Note: Lumi. low-pass filter of channel 0 9-37 BCMK-0055-02		Rev C
Vidsonics Inc.	DRAWN BY: WEI-TE CHANG	

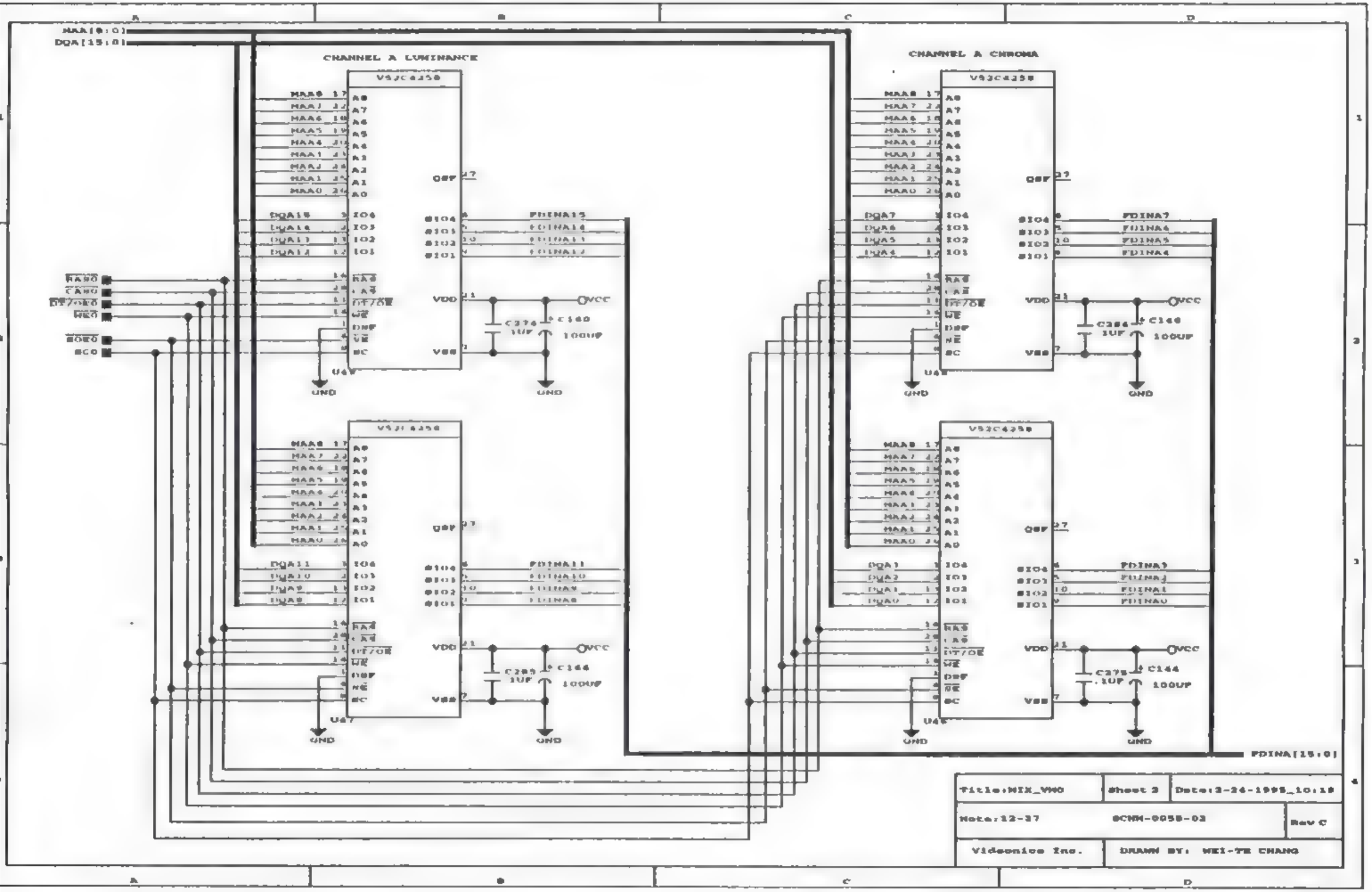

MAA[8:0]
DQA[15:0]
CHANNEL A LUMINANCE
CHANNEL A CHROMA
V52C4258
U47
U48
QSF
VDD
VSS
VCC
GND
C274 1UF
C160 100UF
C285 1UF
C144 100UF
C284 1UF
C146 100UF
C275 .1UF
FDINA15
FDINA14
FDINA13
FDINA12
FDINA11
FDINA10
FDINA9
FDINA8
FDINA7
FDINA6
FDINA5
FDINA4
FDINA3
FDINA2
FDINA1
FDINA0
FDINA[15:0]
Title:MIX_VMO
Sheet 2
Date:2-24-1995_10:18
Note:12-37
SCNM-0058-02
Rev C
Videonics Inc.
DRAWN BY: WEI-TE CHANG

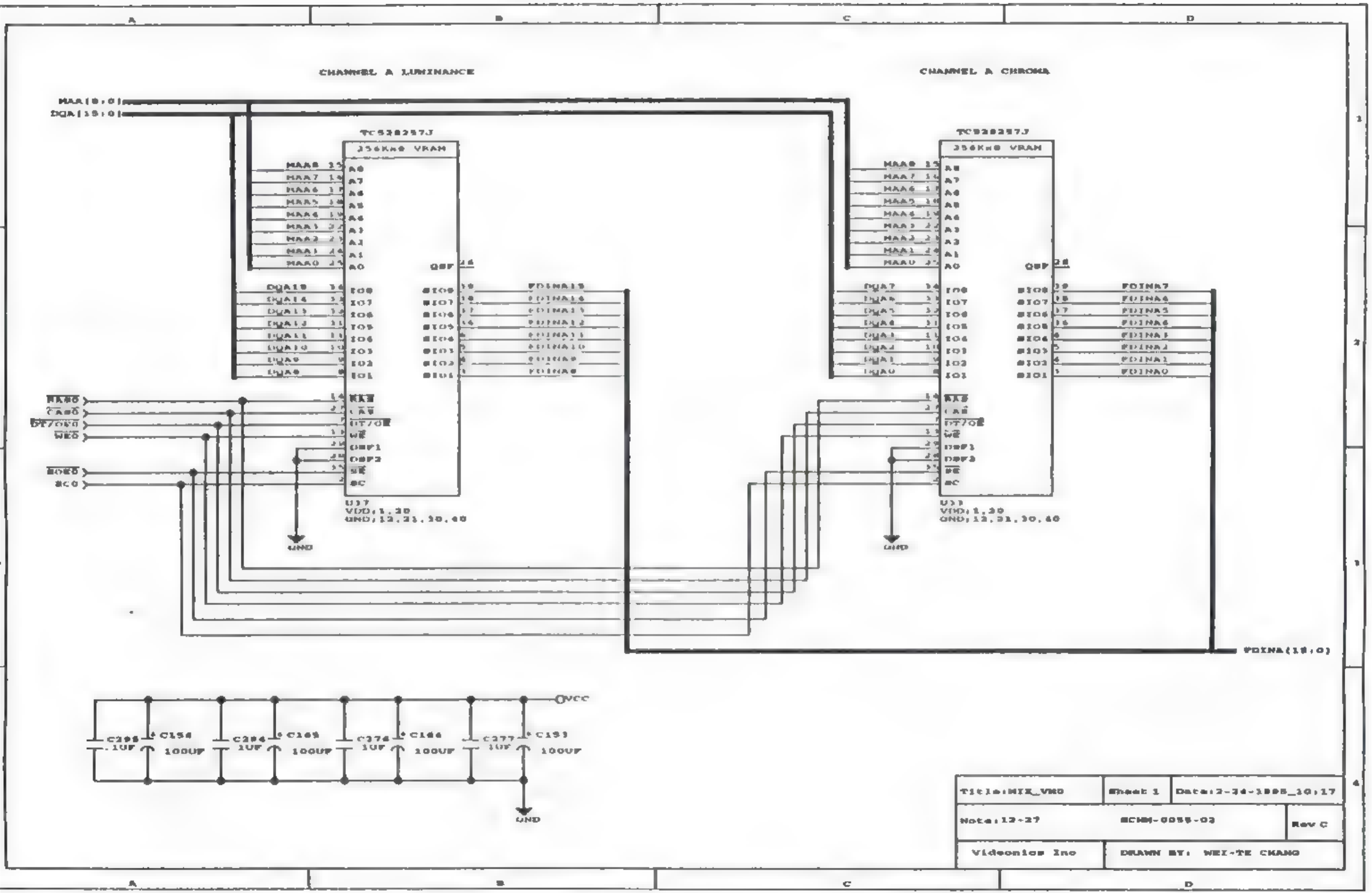
CHANNEL A LUMINANCE
CHANNEL A CHROMA
MAA(8:0)
DQA(15:0)
TC528257J
256Kx8 VRAM
U17
VDD:1,20
GND:12,21,30,40
U33
VDD:1,20
GND:12,21,30,40
FDINA(15:0)
GND
VCC
C295 .1UF
C154 100UF
C284 1UF
C165 100UF
C274 1UF
C164 100UF
C277 1UF
C153 100UF
Title:MIX_VHO
Sheet 1
Date:2-24-1995_10:17
Note:12-27
SCHM-0055-03
Rev C
Videonics Inc
DRAWN BY: WEI-TE CHANG

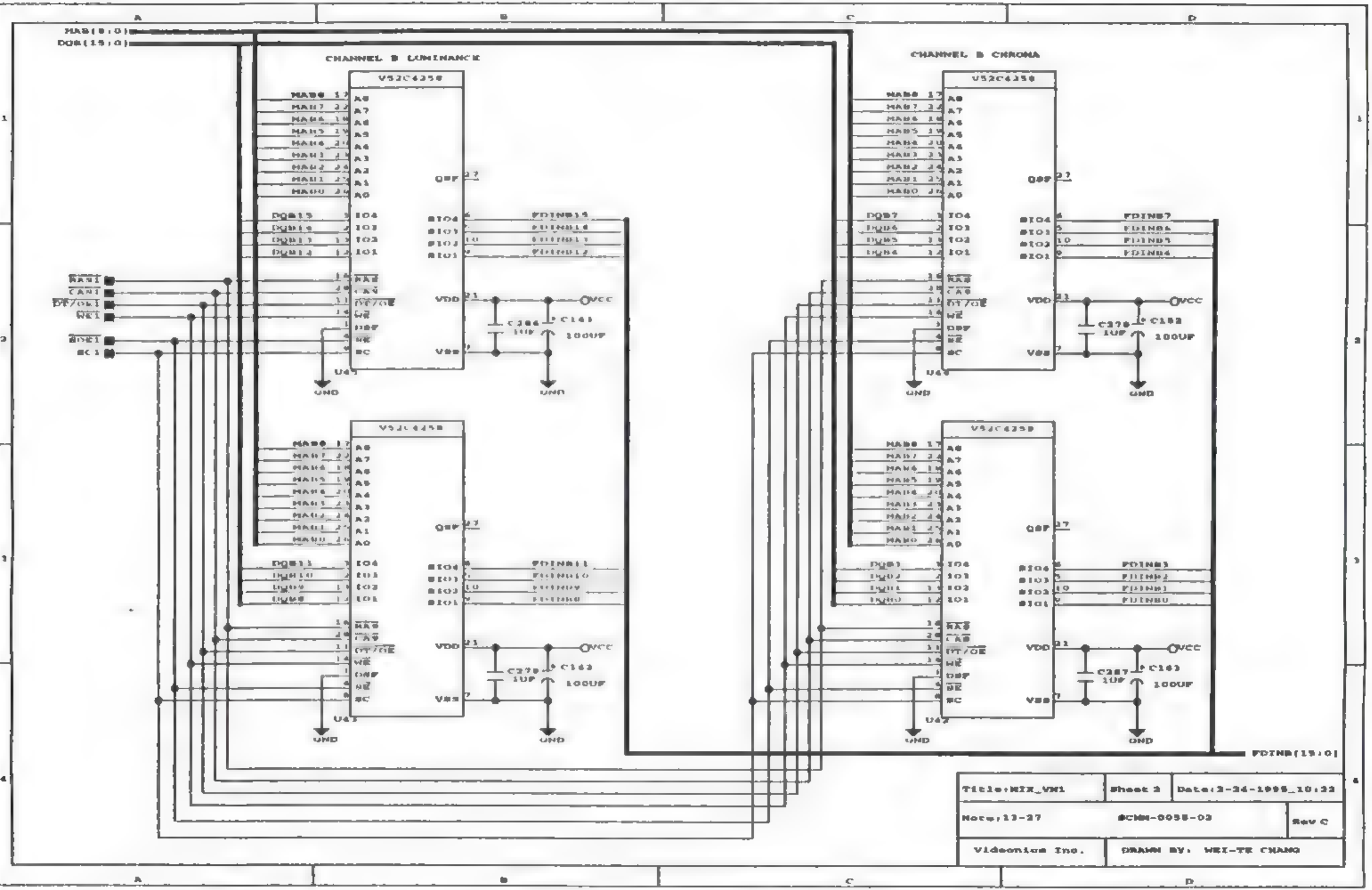

CHANNEL B LUMINANCE
CHANNEL B CHROMA
V52C4258
U41
U42
U43
U44
VDD
VSS
VCC
GND
C284 1UF
C141 100UF
C279 1UF
C142 100UF
C278 1UF
C182 100UF
C287 1UF
C183 100UF
FDINB[15:0]
Title:MIX_VM1
Sheet 2
Date:2-24-1995_10:22
Note:13-27
SCHM-0058-03
Rev C
Videonics Inc.
DRAWN BY: WEI-TE CHANG

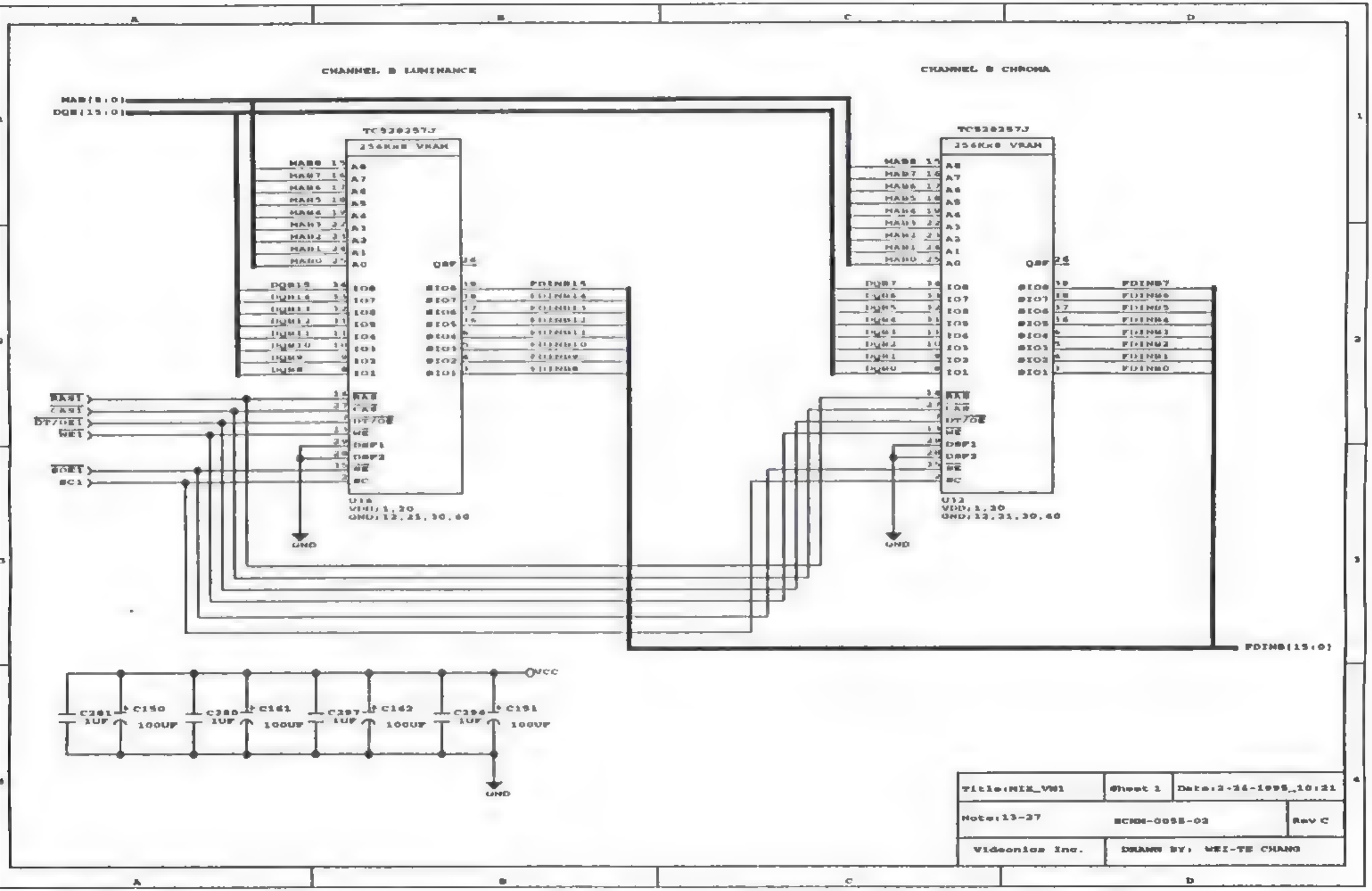
CHANNEL B LUMINANCE
CHANNEL B CHROMA
MAB(8:0)
DQB(15:0)
TC528257J
256Kx8 VRAM
U16
VDD:1,20
GND:12,21,30,40
U12
VDD:1,20
GND:12,21,30,40
FDINB(15:0)
GND
VCC
C281 1UF
C150 100UF
C280 1UF
C161 100UF
C297 1UF
C162 100UF
C294 1UF
C151 100UF
Title:MIX_VM1
Sheet 1
Date:2-24-1995_10:21
Note:13-27
ECMM-0055-02
Rev C
Videonics Inc.
DRAWN BY: WEI-TE CHANG

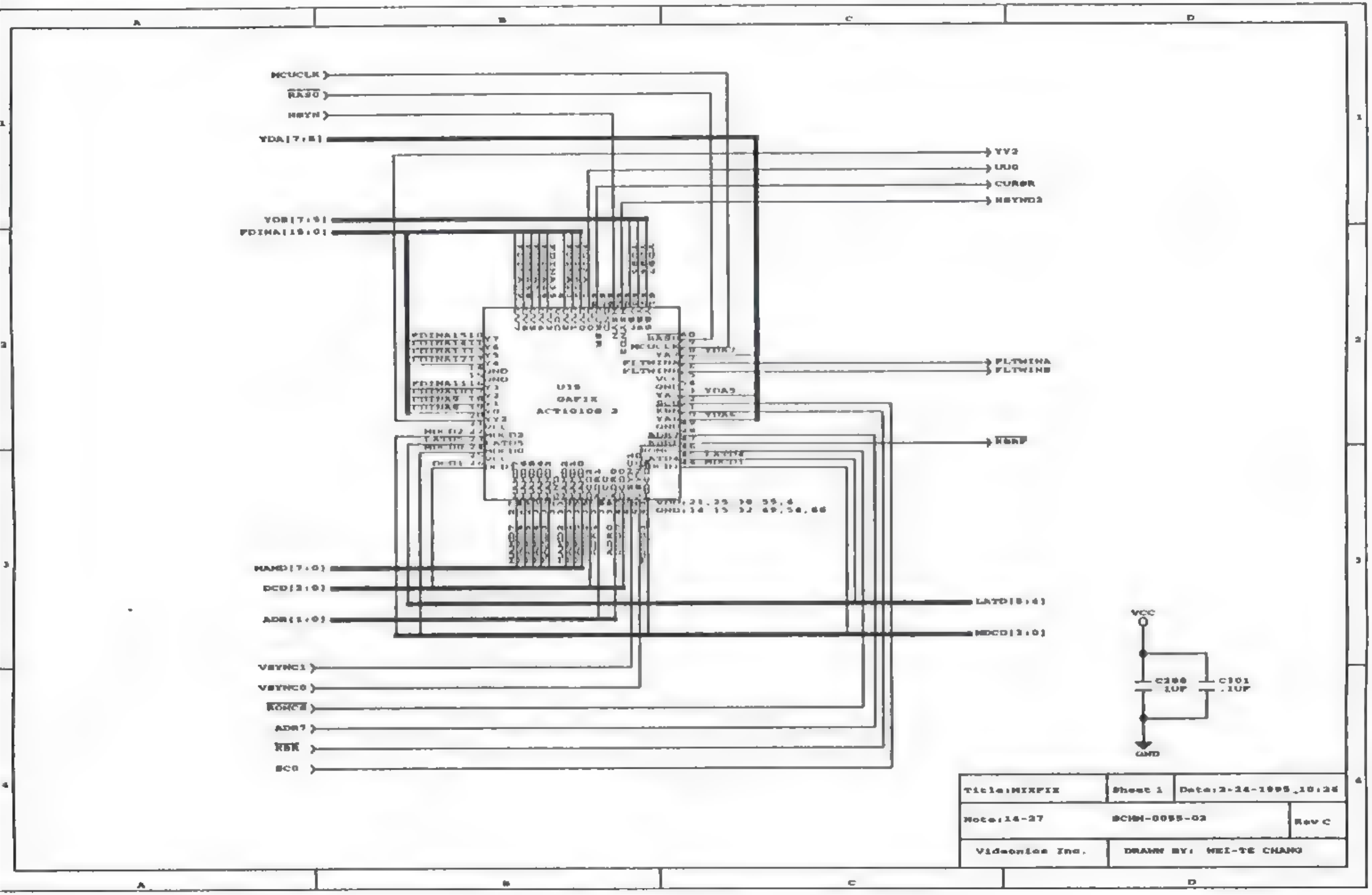
MCUCLK
RAS0
HSYN
YDA[7:5]
YDB[7:5]
FDINA[15:0]
YY2
UU0
CURSR
HSYND2
FLTWINA
FLTWINB
RSRF
U15
GAFIX
ACT10108 2
MAND[7:0]
DCD[2:0]
ADR[1:0]
LATD[5:4]
MDCD[3:0]
VSYNC1
VSYNC0
RONCS
ADR7
RBR
SC0
VCC
C200
.1UF
C101
.1UF
GND
Title:MIXFIX
Sheet 1
Date:2-24-1995 10:26
Note:14-27
SCHM-0055-02
Rev C
Videonics Inc.
DRAWN BY: WEI-TE CHANG

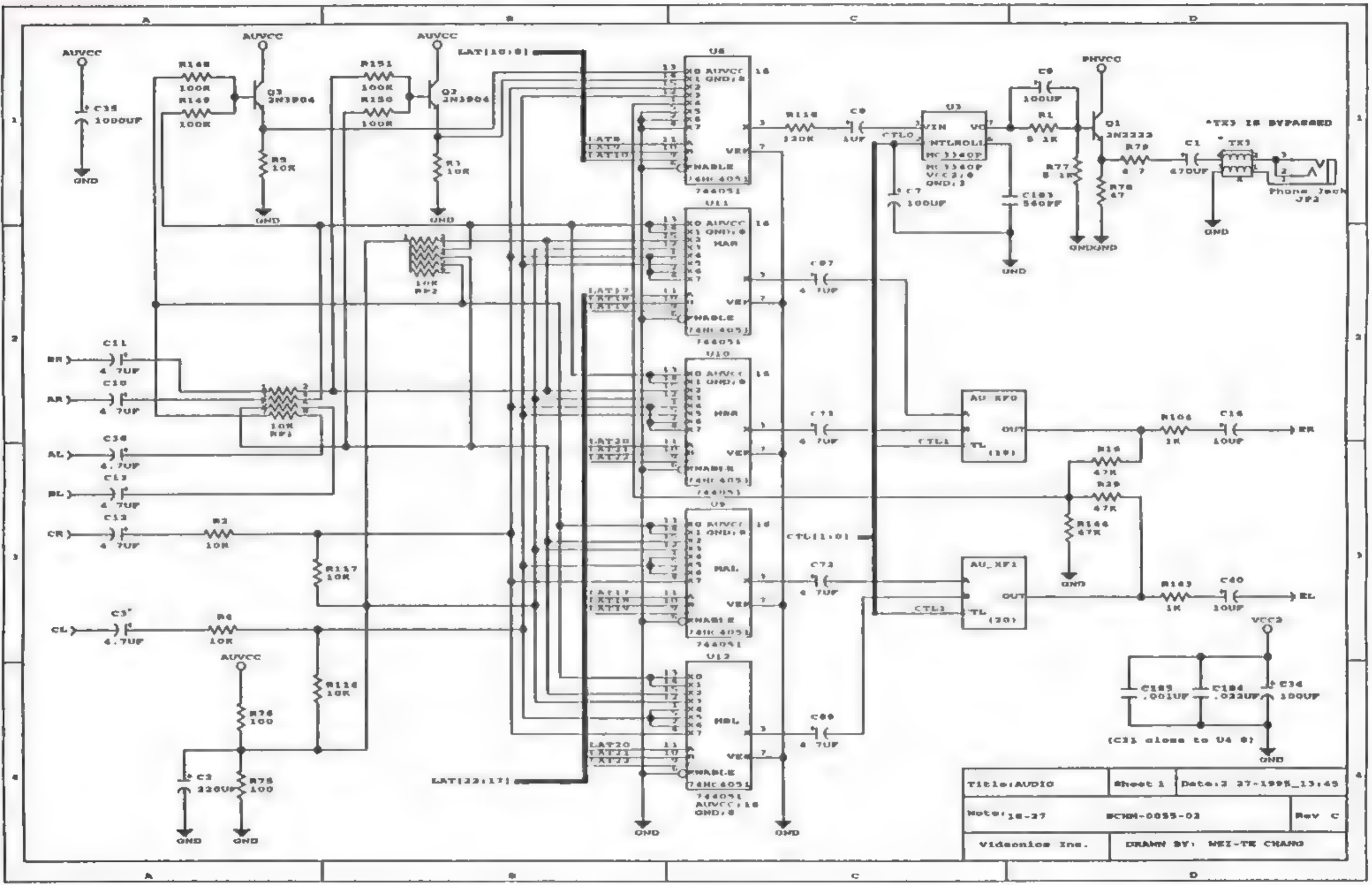

AUVCC
C35
1000UF
GND
R148
100K
R149
100K
Q3
2N3904
R5
10K
R151
100K
R150
100K
Q2
2N3904
R3
10K
LAT[10:8]
U6
U11
U10
U9
U12
74HC4051
MAR
MBR
MAL
MBL
VEE
ENABLE
R116
120K
C9
1UF
U3
VIN
VO
CTLO
C7
100UF
C183
560PF
C9
100UF
R1
5.1K
Q1
2N2222
R77
5.1K
R78
47
R79
4.7
C1
470UF
TX3
*TX3 IS BYPASSED
Phone Jack
JP2
C87
4.7UF
C73
4.7UF
C72
4.7UF
C89
4.7UF
AU_XF0
AU_XF1
OUT
TL
CTL1
CTL[1:0]
R104
1K
C16
10UF
ER
R16
47K
R29
47K
R144
47K
R143
1K
C40
10UF
EL
VCC2
C185
.001UF
C184
.022UF
C34
100UF
(C31 close to U4 8)
C11
4.7UF
C10
4.7UF
C36
4.7UF
C13
4.7UF
C12
4.7UF
R2
10K
R117
10K
C3
4.7UF
R4
10K
R116
10K
R76
100
R75
100
C2
220UF
BR
AR
AL
BL
CR
CL
10K
RP1
10K
RP2
LAT[22:17]
Title:AUDIO
Sheet 1
Date:2 27-1995_13:45
Note:16-27
SCHM-0055-02
Rev C
Videonics Inc.
DRAWN BY: WEI-TE CHANG

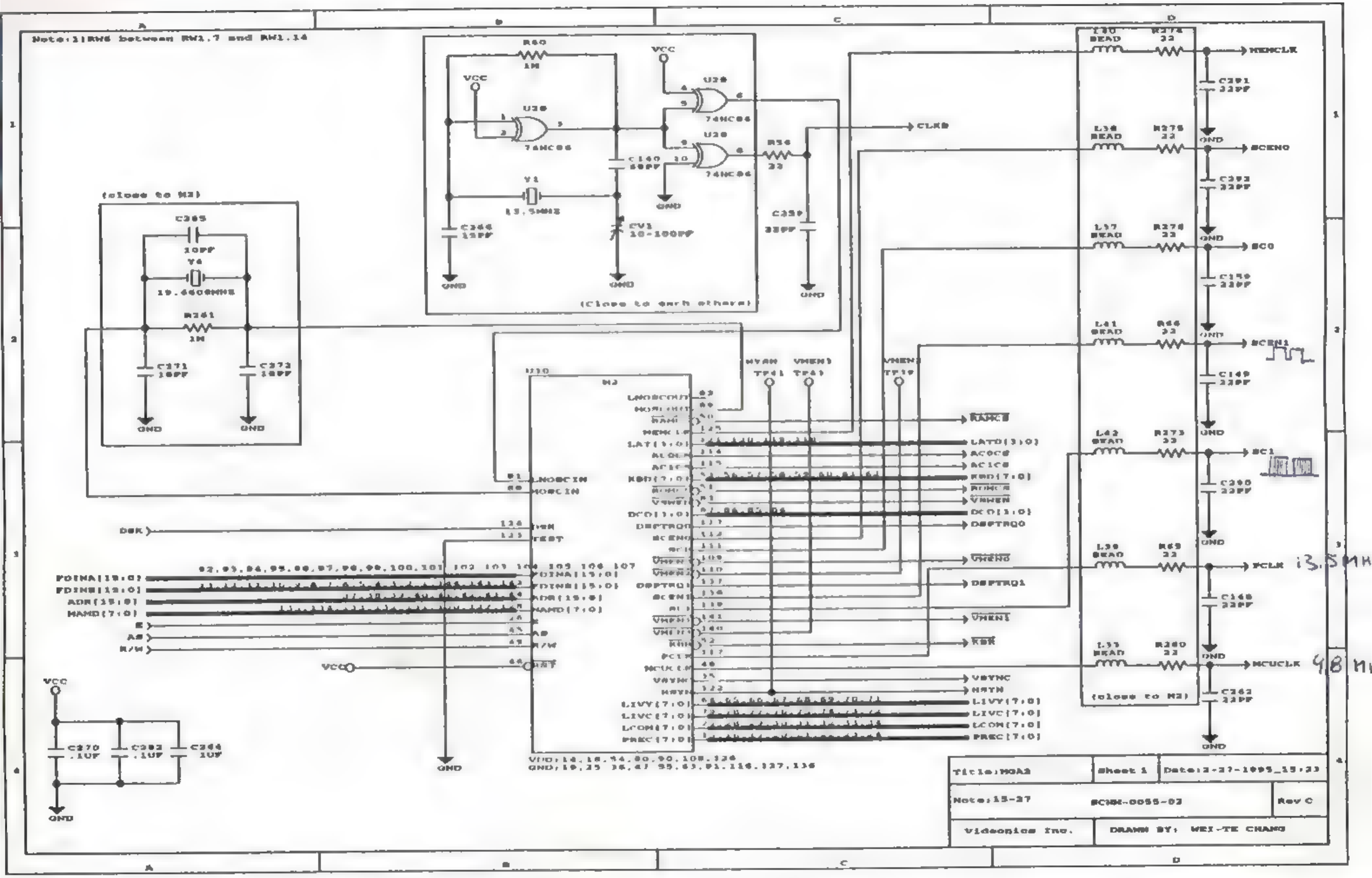

Note:1)RW6 between RW1.7 and RW1.14
(close to M2)
(Close to each others)
VCC
GND
U28
74HC86
Y1
13.5MHZ
CV1
10-100PF
CLKB
MEMCLK
SCEN0
SC0
SCEN1
SC1
PCLK
MCUCLK
13.5MH
4.8 MH
RAMCS
LATO(3:0)
ACOCS
ACICS
KBD(7:0)
ROMCS
VSWEN
DCO(3:0)
DSPTRQ0
VMEN0
DSPTRQ1
VMEN1
KBR
VSYNC
HSYN
LIVY(7:0)
LIVC(7:0)
LCOM(7:0)
PREC(7:0)
LNOSCIN
MOSCIN
DSK
TEST
FDINA(15:0)
FDINB(15:0)
ADR(15:0)
MAMD(7:0)
E
AS
R/W
RST
VDD:14,18,54,80,90,108,126
GND:19,25,36,47,55,63,91,116,127,136
Title:MGA2
Sheet 1
Date:2-27-1995_15:23
Note:15-27
SCHM-0055-02
Rev C
Videonics Inc.
DRAWN BY: WEI-TE CHANG

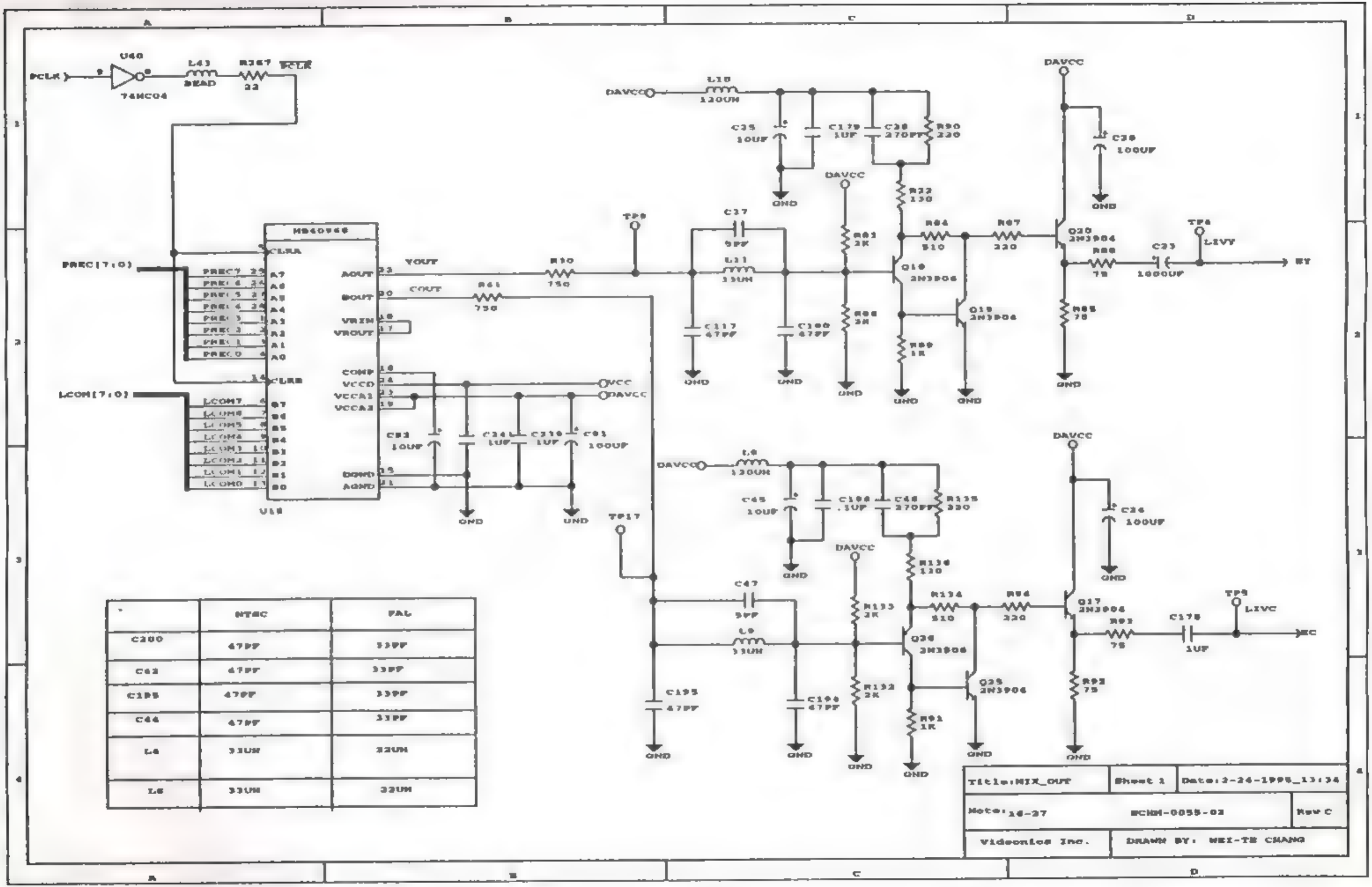

	NTSC	PAL
C200	47PF	33PF
C62	47PF	33PF
C195	47PF	33PF
C44	47PF	33PF
L4	33UH	22UH
L6	33UH	22UH

Title:MIX_OUT	Sheet 1	Date:2-26-1995_13:34
Note:16-27	MCHM-0055-02	Rev C
Videonics Inc.	DRAWN BY: WEI-TE CHANG	

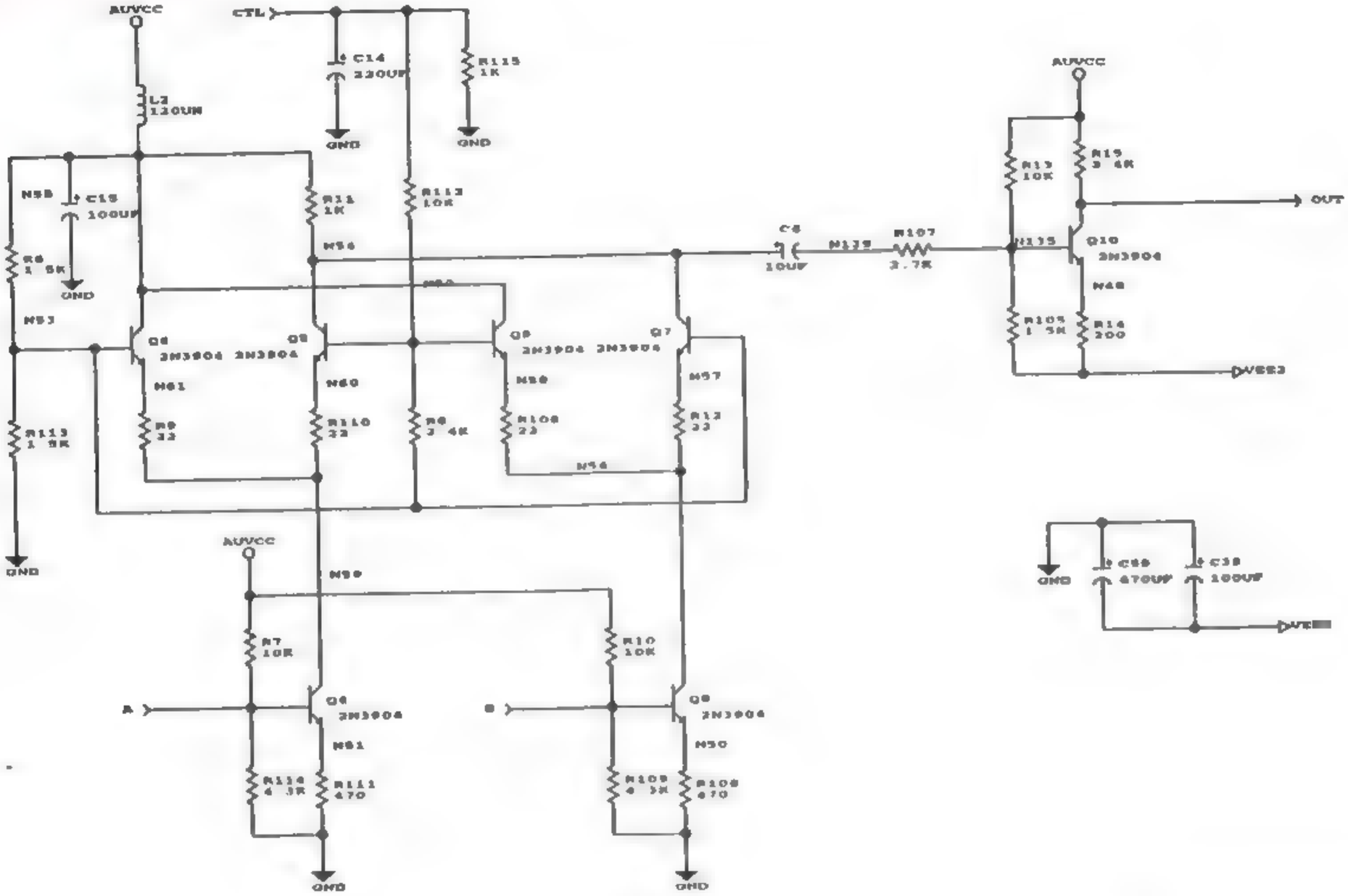

Title:AU_XPO	Sheet 1	Date:2-27-1995_13:44
Note:Audio Index of channel 0 19-27	ECHM-0058-02	Rev C
Videonics Inc.	DRAWN BY: WEI-TE CHANG	

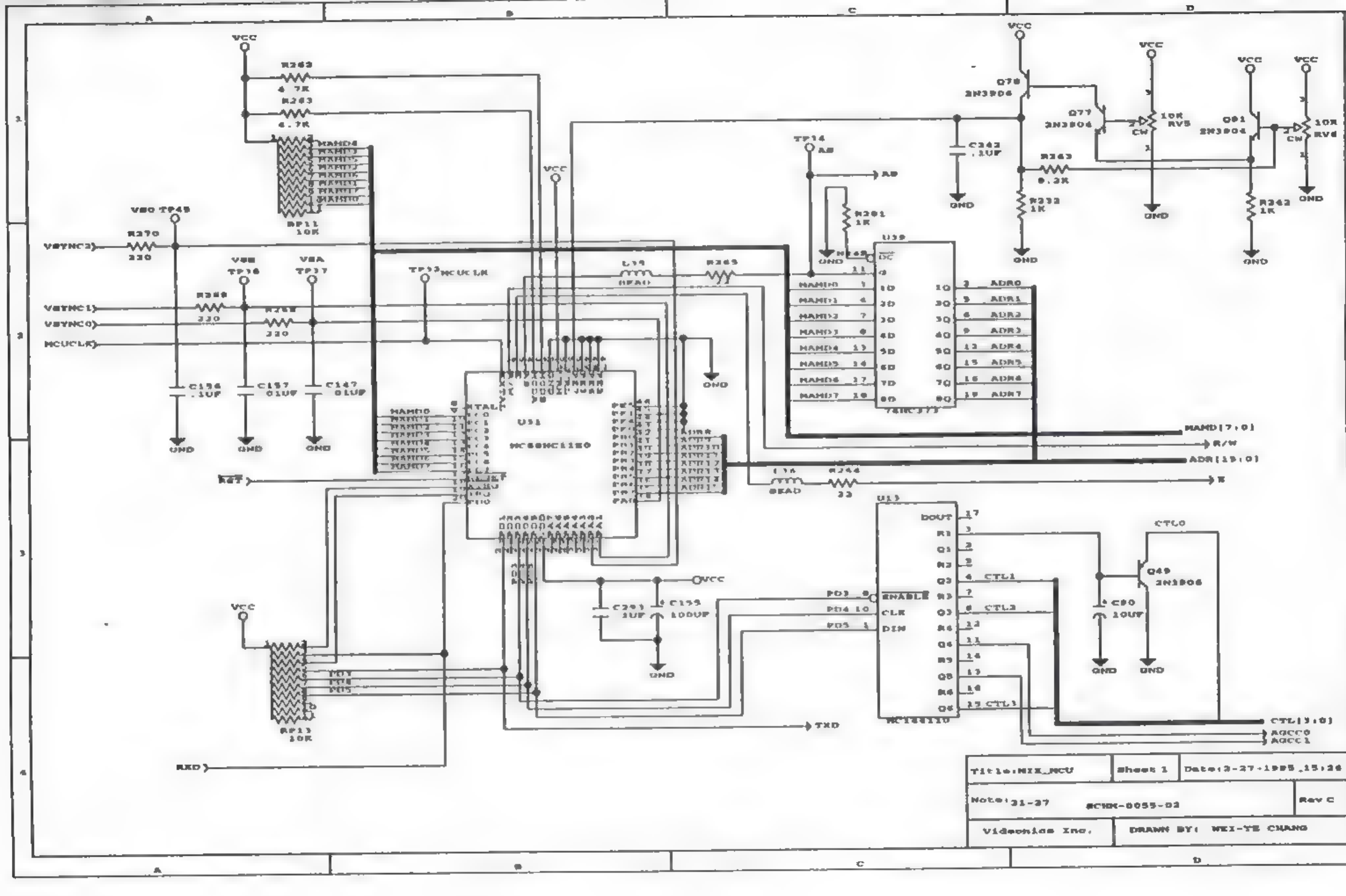

Title:MIX_MCU	Sheet 1	Date:3-27-1995 ,15:26
Note:31-27 SCHM-0055-02		Rev C
Videonics Inc.	DRAWN BY: WEI-TE CHANG	

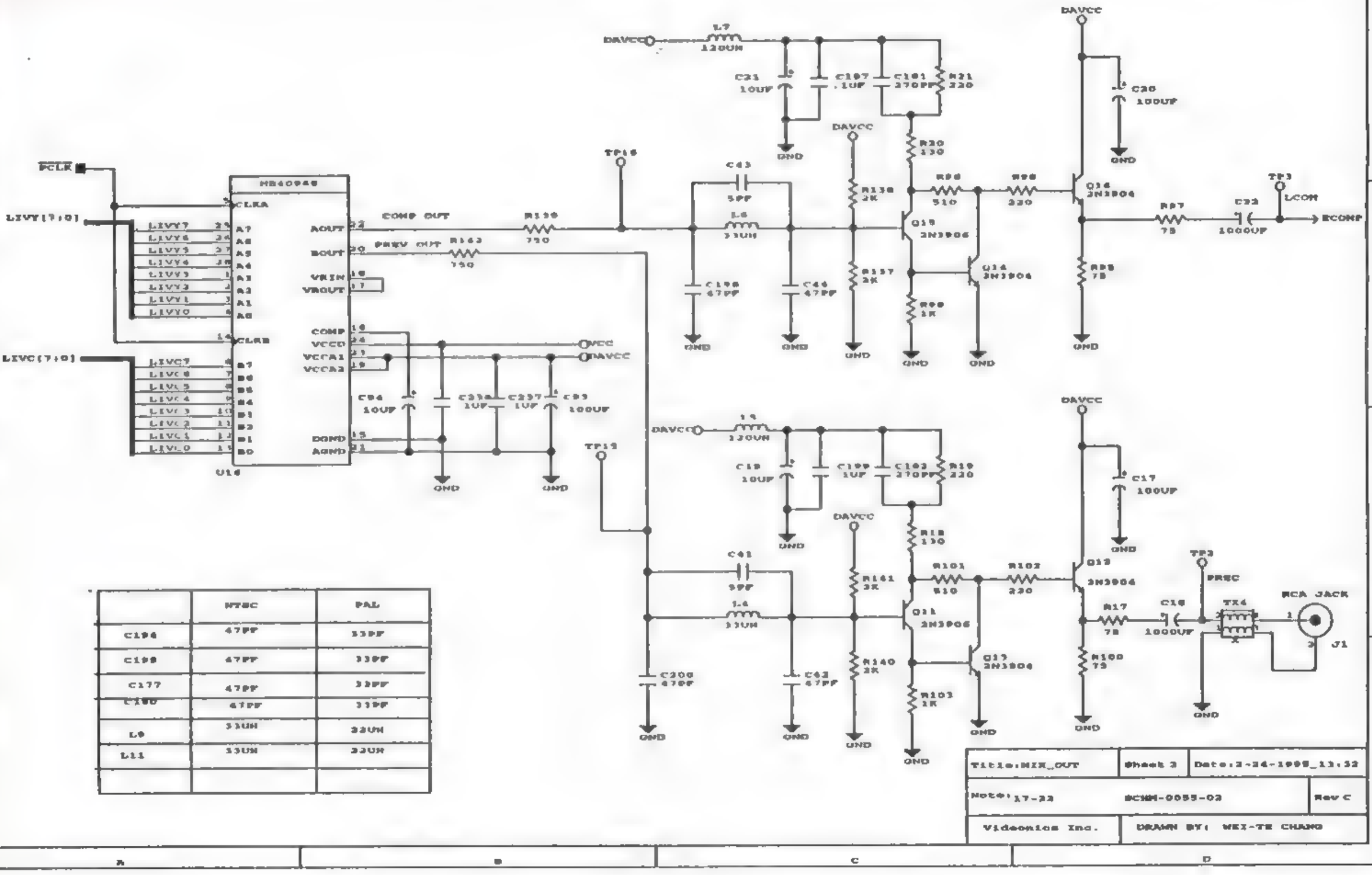

	NTSC	PAL
C196	47PF	33PF
C198	47PF	33PF
C177	47PF	33PF
C200	47PF	33PF
L9	33UH	33UH
L11	33UH	33UH

Title:MIX_OUT	Sheet 3	Date:3-24-1995_13:32
Note: 17-22	BCHM-0055-02	Rev C
Videomics Inc.	DRAWN BY: WEI-TE CHANG	

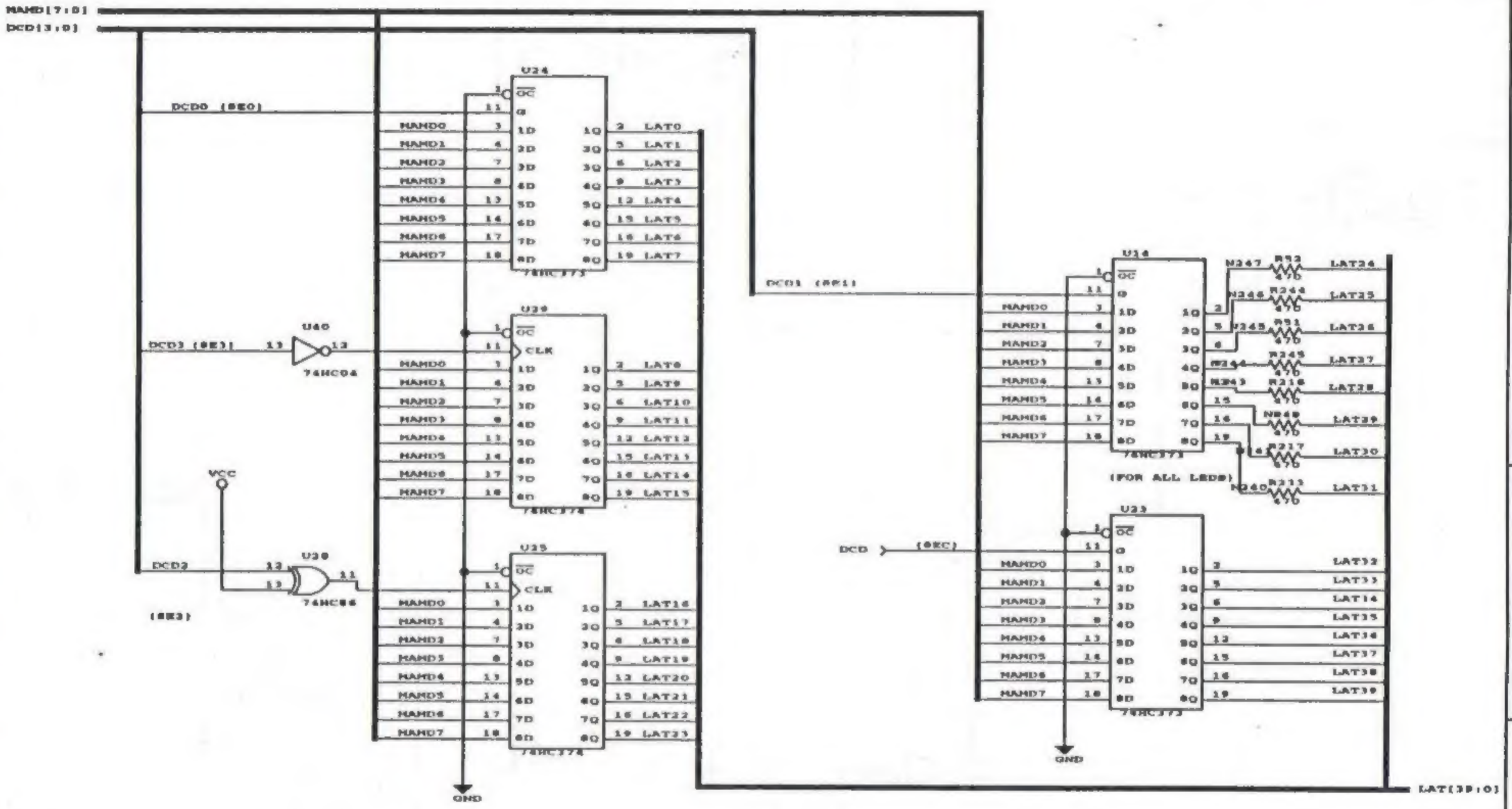

Note:
1) Lat[11..11] is for ROM banks selection

Title:LATCH	Sheet 1	Date:3-27-1995_13:52
Note: 22-27	8CHM-0055-02	Rev C
Videonics Inc.	DRAWN BY: WEI-TE CHANG	

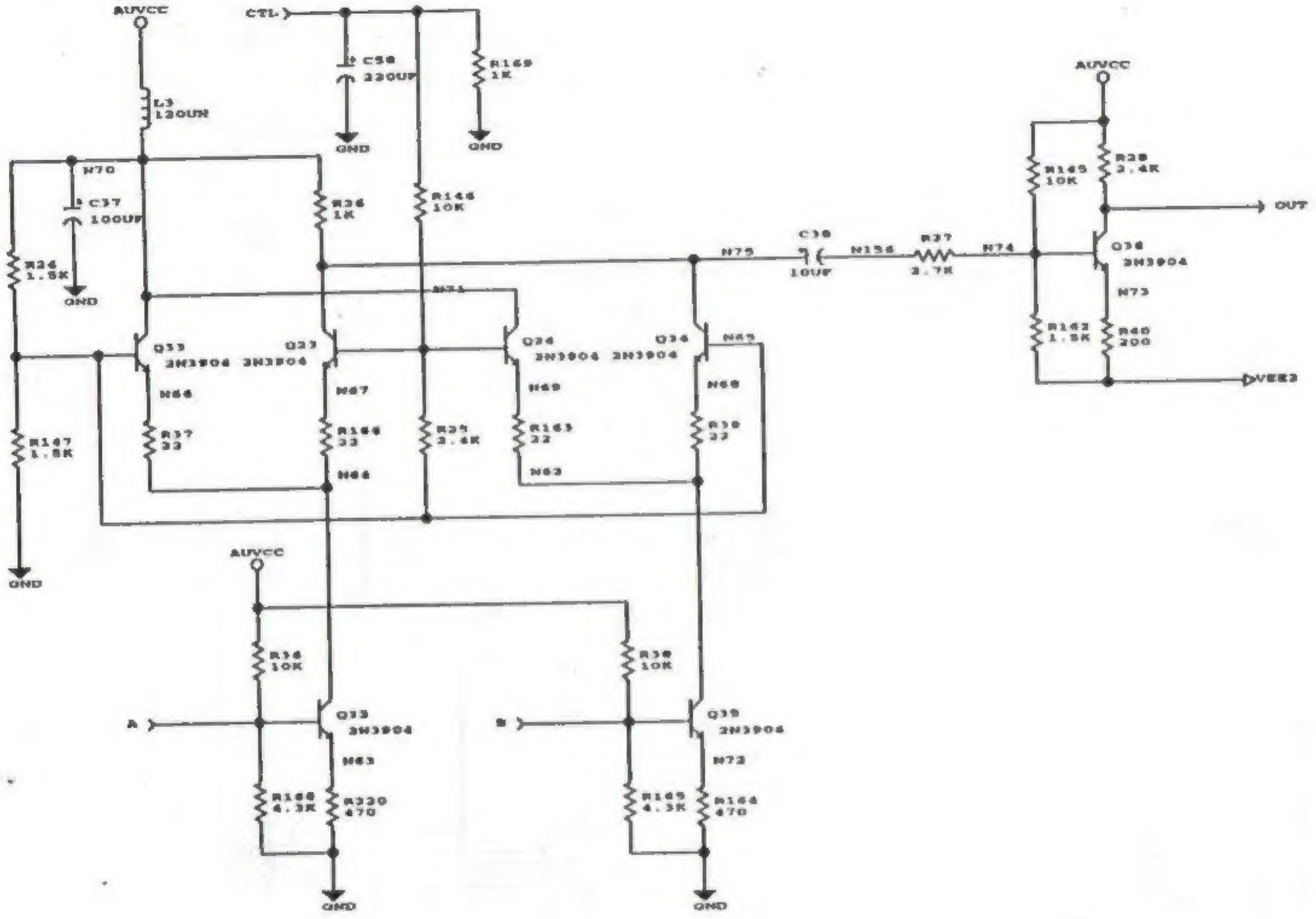

Title:AU_XF1	Sheet 1	Date:2-27-1995_13:48
Note: Audio fader of channel 1 20-27 SCHM-0055-02		Rev C
Videonics Inc.	DRAWN BY: WEI-TE CHANG	

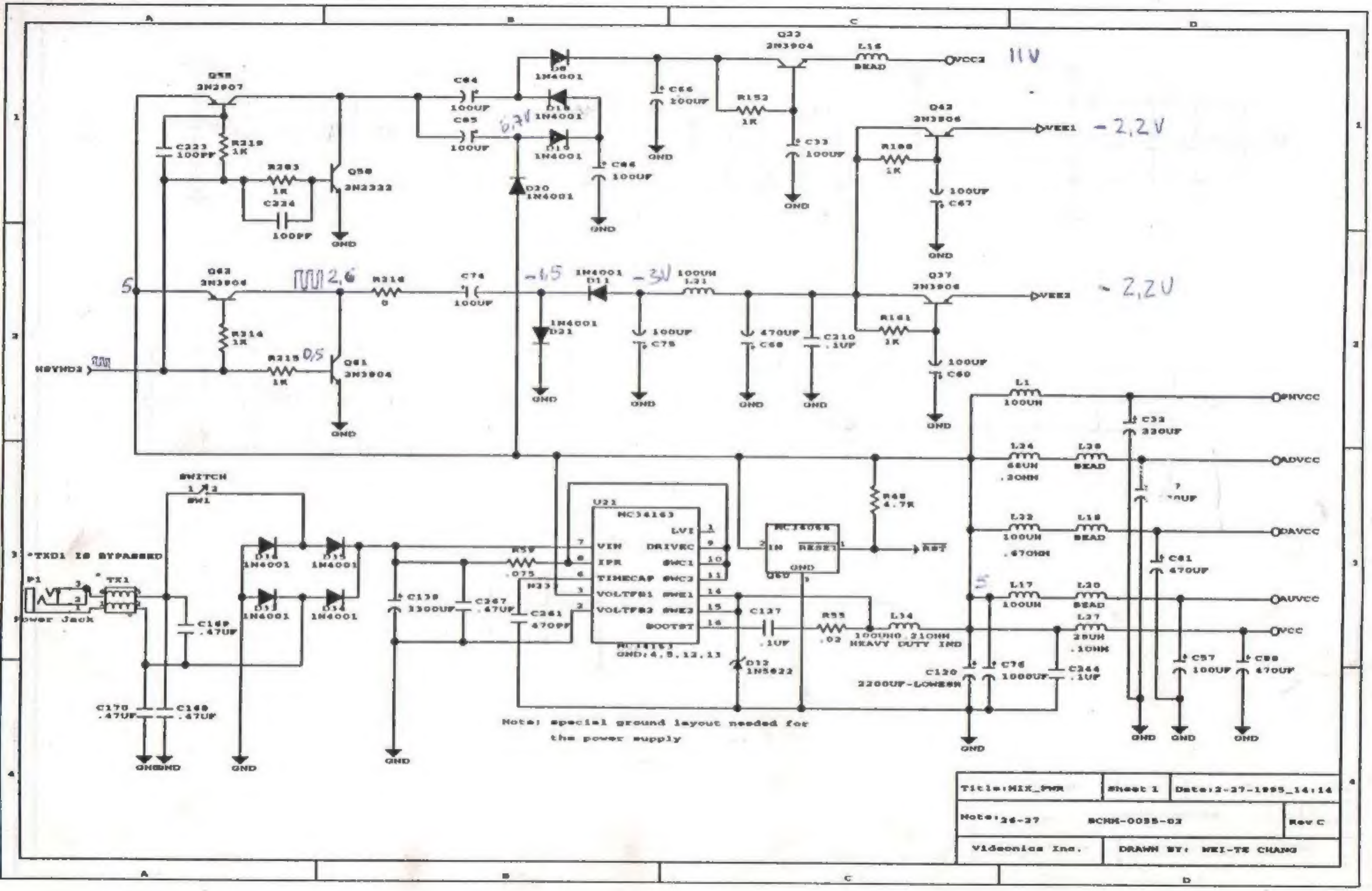

Q58 2N2907
C223 100PF
R219 1K
R283 1K
C224 100PF
Q58 2N2222
GND
C64 100UF
C65 100UF
D8 1N4001
D18 1N4001
D19 1N4001
D20 1N4001
C66 100UF
C86 100UF
Q22 2N3904
L16 BEAD
VCC2
11V
R152 1K
C33 100UF
Q42 2N3906
VEE1
-2,2V
R188 1K
100UF C67
Q62 2N3906
2,6
R216 0
C74 100UF
-1,5
1N4001 D11
-3V
100UH L21
Q37 2N3906
VEE2
-2,2V
R161 1K
100UF C60
R214 1K
R215 1K
0,5
Q61 2N3904
HSYND2
1N4001 D21
100UF C75
470UF C68
C210 .1UF
L1 100UH
PHVCC
C32 220UF
L24 68UH .20HM
L26 BEAD
ADVCC
L22 100UH .670HM
L18 BEAD
DAVCC
C61 470UF
L17 100UH
L20 BEAD
AUVCC
L27 28UH .10HM
VCC
C57 100UF
C88 470UF
C120 2200UF-LOWESR
C76 1000UF
C244 .1UF
R48 4.7K
RST
U21 MC34163
VIN
IPR
TIMECAP
VOLTFB1
VOLTFB2
LVI
DRIVEC
SWC1
SWC2
SWE1
SWE2
BOOTST
GND:4,5,12,13
MC34066
IN
RESET
Q60
C127 .1UF
R55 .02
L34 100UH0.21OHM HEAVY DUTY IND
D12 1N5822
R59 .075
C139 3300UF
C267 .47UF
C261 470PF
SWITCH
SW1
*TXD1 IS BYPASSED
P1
Power Jack
TX1
C169 .47UF
C170 .47UF
C168 .47UF
D14 1N4001
D15 1N4001
D13 1N4001
D14 1N4001
Note: special ground layout needed for the power supply
Title:MIX_PWR
Sheet 1
Date:2-27-1995_14:14
Note:26-27
BCHM-0035-02
Rev C
Videonics Inc.
DRAWN BY: WEI-TE CHANG

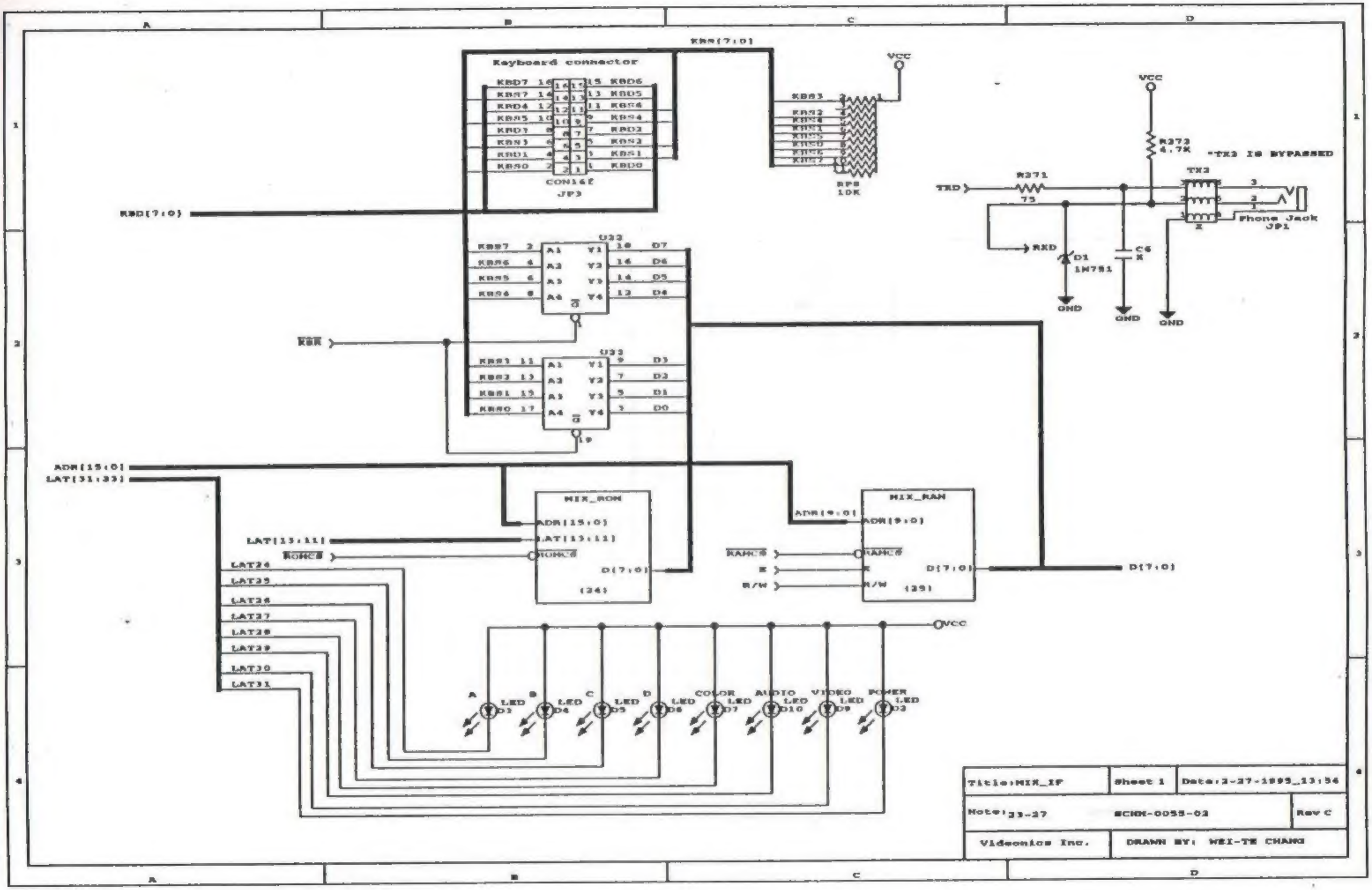

Keyboard connector
CON16E
JP3
KBD(7:0)
KBS(7:0)
VCC
RP8
10K
R273
4.7K
*TX2 IS BYPASSED
TX2
R271
75
TXD
RXD
D1
1N751
C6
X
GND
Phone Jack
JP1
U32
U33
KBR
ADR(15:0)
LAT(31:23)
MIX_ROM
ADR(15:0)
LAT(13:11)
ROMCS
D(7:0)
(24)
MIX_RAM
ADR(9:0)
RAMCS
E
R/W
(25)
D(7:0)
LAT24
LAT25
LAT26
LAT27
LAT28
LAT29
LAT30
LAT31
A
B
C
D
COLOR
AUDIO
VIDEO
POWER
LED
Title:MIX_IF
Sheet 1
Date:2-27-1995_13:54
Note:23-27
SCHM-0055-02
Rev C
Videonics Inc.
DRAWN BY: WEI-TE CHANG